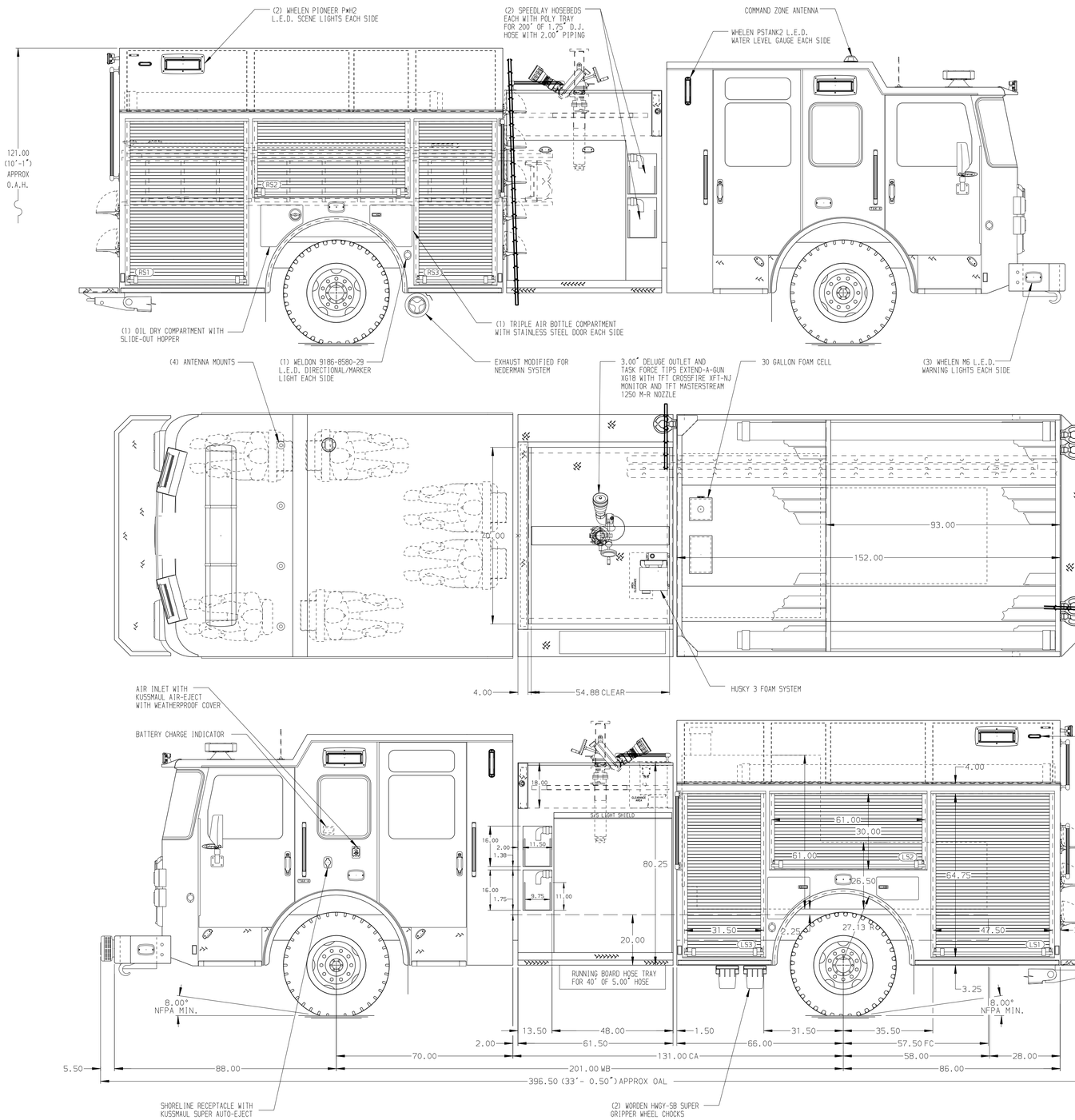

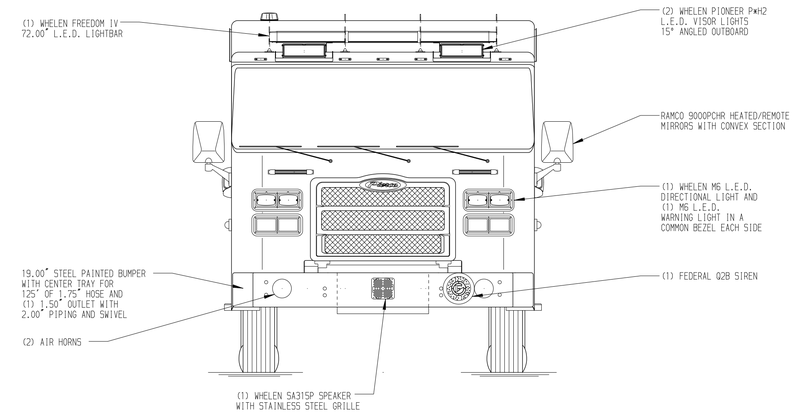

HOSEBED CAPACITIES

1. 500' OF 3.00" HOSE
2. 1000' OF 5.00" HOSE

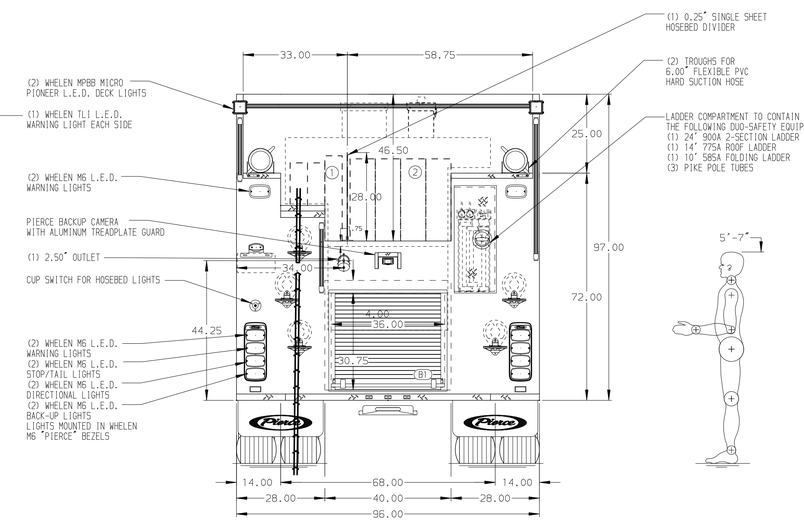

ALUMINUM BODY

SIDE ROLL AND FRONTAL IMPACT PROTECTION

CUSTOMER APPROVAL

APPROVED BY: _____

DATE: _____

Pierce MANUFACTURING INC.

NOTE

DIMENSIONS SHOWN ARE APPROXIMATE AND ARE SUBJECT TO MINOR DEVIATIONS AS MAY OCCUR OR BE NECESSARY IN CONSTRUCTION.
MINOR DETAILS NOT SHOWN.

1. KUSSMAUL BATTERY CHARGER LOCATED PER ORDER
2. BATTERY CHARGER LOCATED PER ORDER
3. DUAL L.E.D. LIGHT STRIPS LOCATED IN HOSE BED
4. TEN FULL WIDTH/DEPTH ADJUSTABLE SHELVES LOCATED PER ORDER
5. TWO ADJUSTABLE TILTING SLIDE-OUT TRAY LOCATED PER ORDER
6. FIVE FLOOR MOUNTED SLIDE-OUT TRAYS LOCATED PER ORDER
7. HORIZONTAL EQUIPMENT MOUNTING TRACKS LOCATED PER ORDER

REV	DATE	BY	CH
▽	-	-	-

CHASSIS DATA
MAKE: PIERCE
MODEL: ENFORCER

TITLE: 1500-D-780P, 750G WATER W/30G FOAM,152" BODY LADDERS THRU BODY, (2) HSH, (2) SPEEDLAYS, DELUGE

FOR: WASHINGTON TOWNSHIP FIRE DEPARTMENT
WASHINGTON, MICHIGAN

DWG NO.: 38137AD

JOB NO.	SCALE	DRAWN BY	CHECKED BY	SHEET SIZE	SHEET NO.
38137	1:24	KLE	CZA	D	1 OF 1

DATE: 21FEB23 (DRAWN BY) 21FEB23 (CHECKED BY)

View File Created 21-FEB-2023 09:49:15