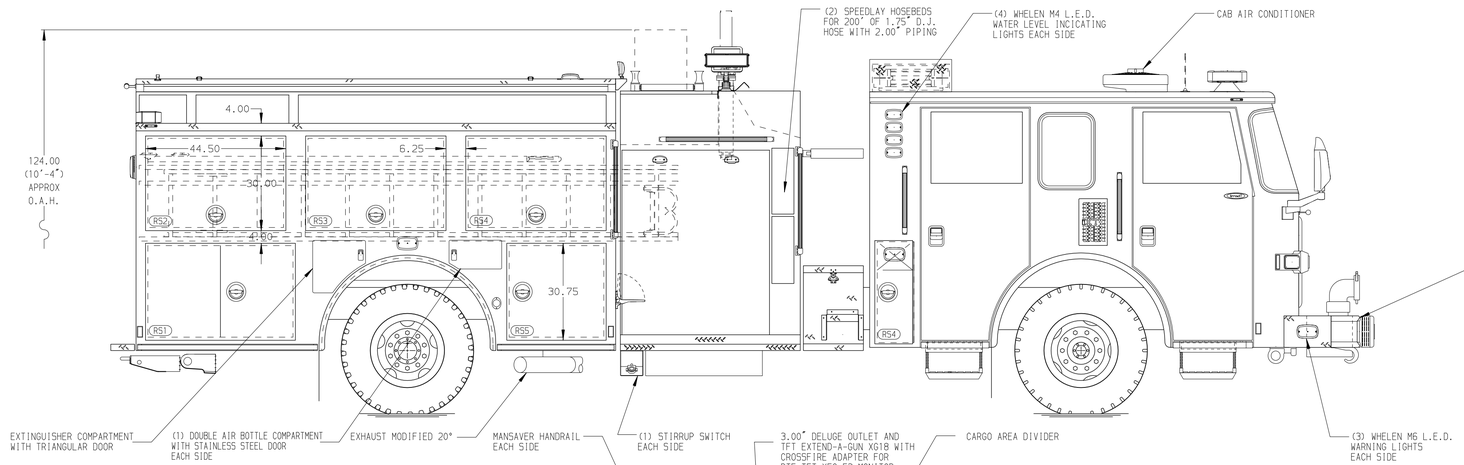

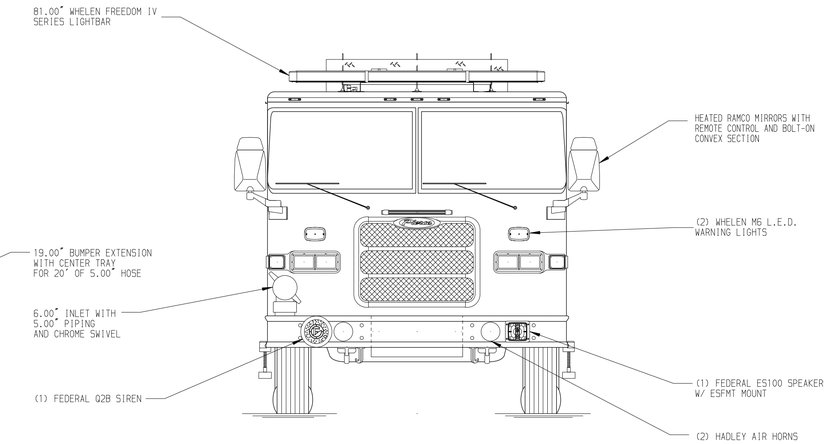

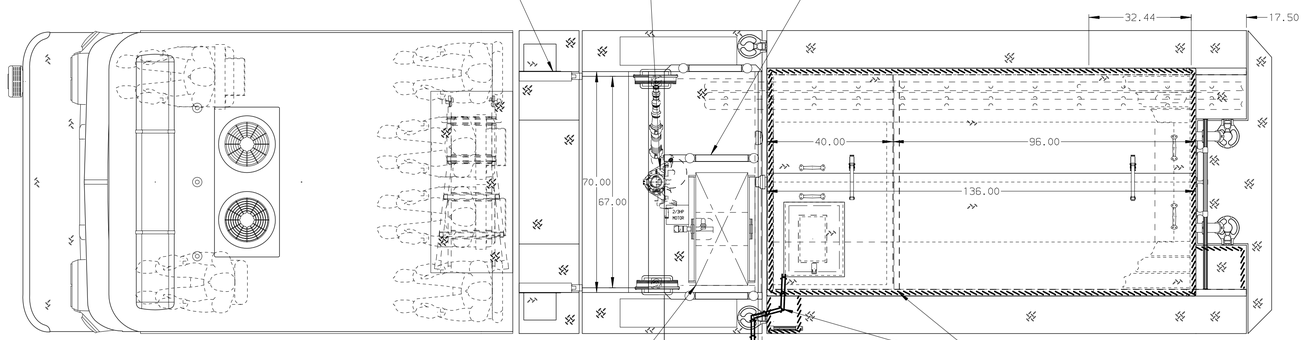

HOSEBED CAPACITIES

1 - 650' OF 1.75" D.J. POLY HOSE
2 - 500' OF 5.00" D.J. POLY HOSE
3 - 500' OF 5.00" D.J. POLY HOSE
4 - 700' OF 2.50" D.J. POLY HOSE

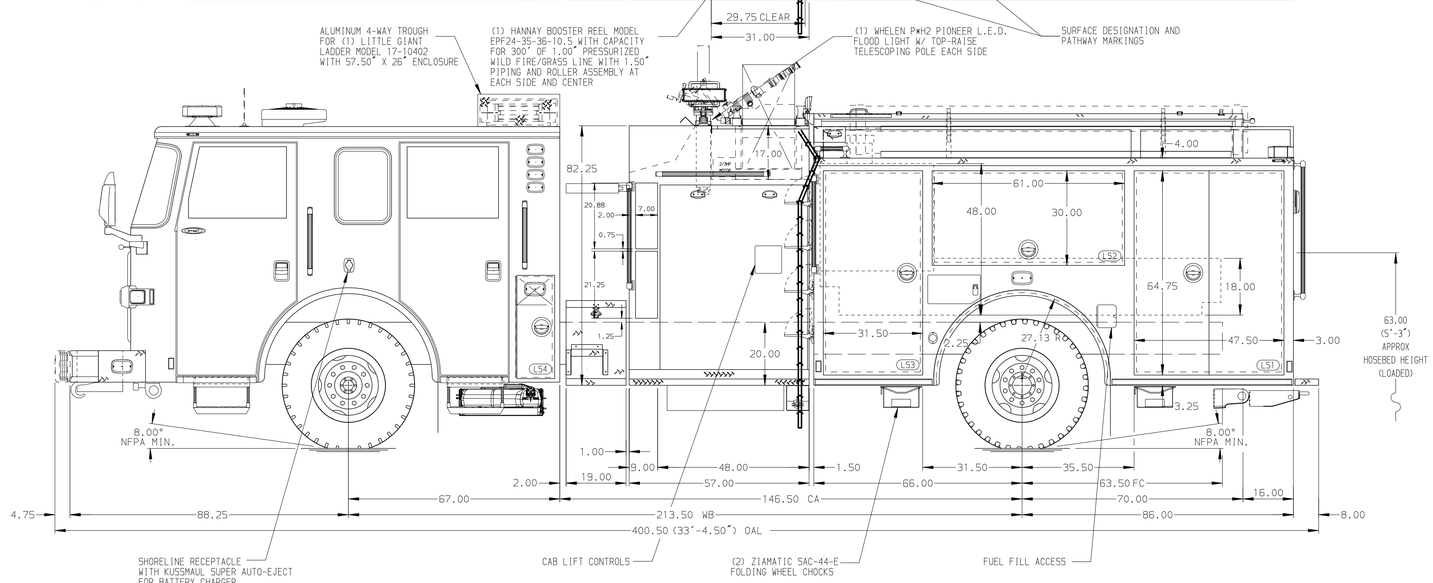

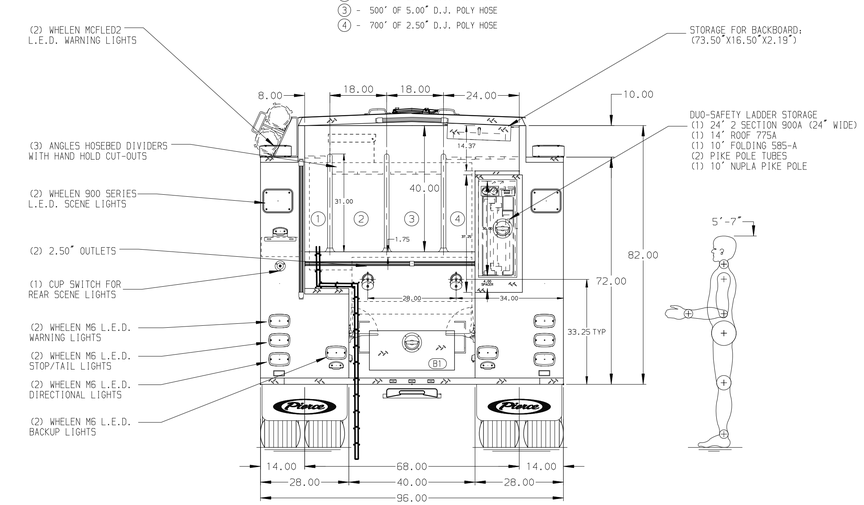

ALUMINUM BODY

MAXIMUM O.A.H. 120.00"

NOTE

DIMENSIONS SHOWN ARE APPROXIMATE AND ARE SUBJECT TO MINOR DEVIATIONS AS MAY OCCUR OR BE NECESSARY IN CONSTRUCTION.
MINOR DETAILS NOT SHOWN.

1. INSTA-CHAIN AUTOMATIC TIRE CHAINS TO BE PROVIDED AT REAR
2. AIR INLET WITH DISCONNECT COUPLING LOCATED ON DRIVER'S STEP WELL
3. VOGEL LUBE SYSTEM PUMP LOCATED PER SHOP ORDER
4. KUSSMAUL BATTERY CHARGER LOCATED BEHIND DRIVER'S SEAT
5. BATTERY CHARGE INDICATOR LOCATED NEAR DRIVER'S SEAT RISER WITH BRACKET
6. PARTITION BETWEEN COMPARTMENTS P1/R1

REV	DATE	BY	CH
V	20DEC23	JJB	BSE
V	10NOV23	JJB	BSE
V	18SEP23	JJB	BSE
V	25MAY23	JJB	BSE

CHASSIS DATA
MAKE: PIERCE
MODEL: ARROW XT

TITLE: 1500-D-500P, 500 GALLON WATER TANK, 152" FDLER BODY LADDERS BTWN TANK & SS, (2) SPEEDLAYS, DELUGE
FOR: WHITNEY FIRE PROTECTION DISTRICT BOISE, IDAHO
DWG NO.: 38142AD-SH1

Pierce MANUFACTURING INC.

JOB NO.	38142
SCALE	1:24
DATE	
DRAWN BY	JJB 18MAY23
CHECKED BY	BSE 22MAY23
SHEET SIZE	D
SHEET NO.	1 OF 2

View File Created 17-JAN-2024 13:59:56