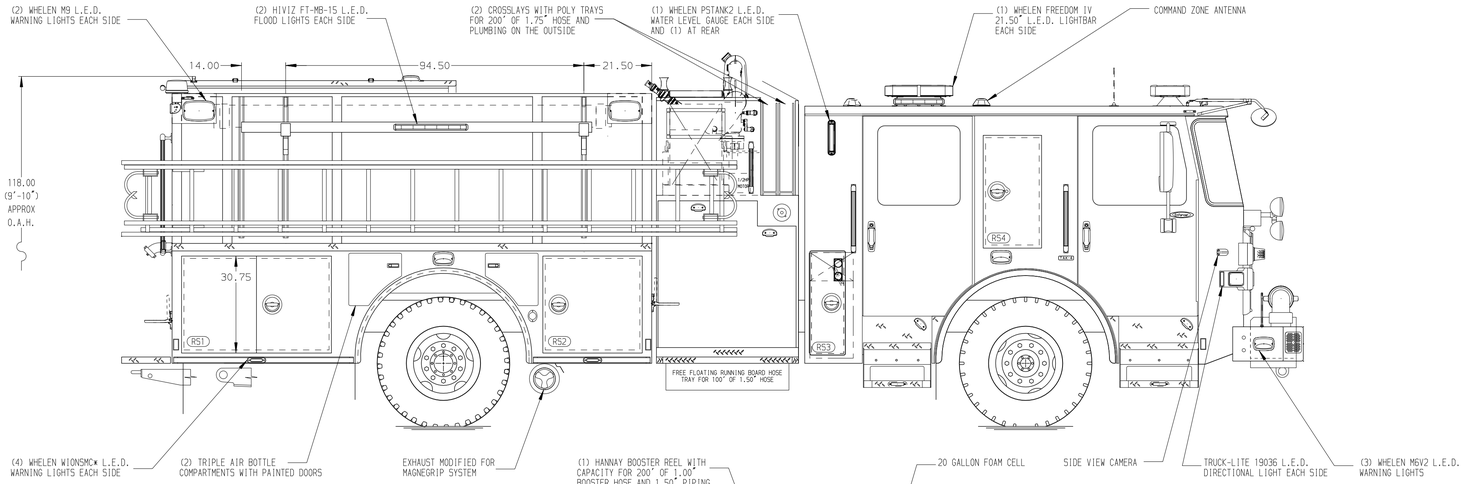

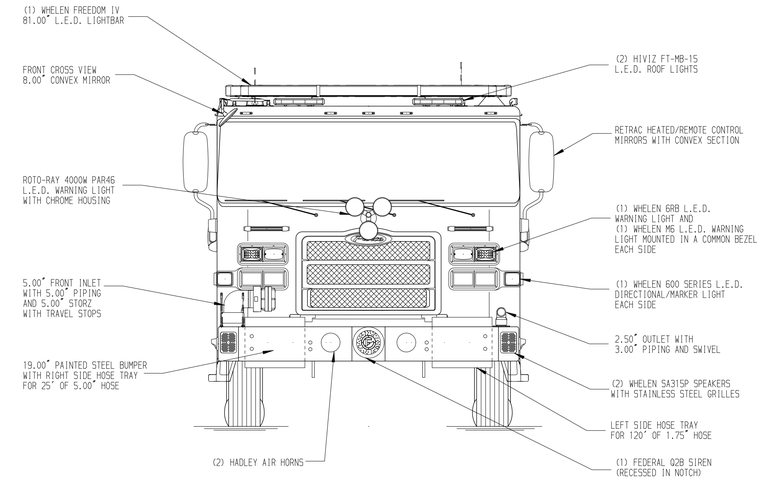

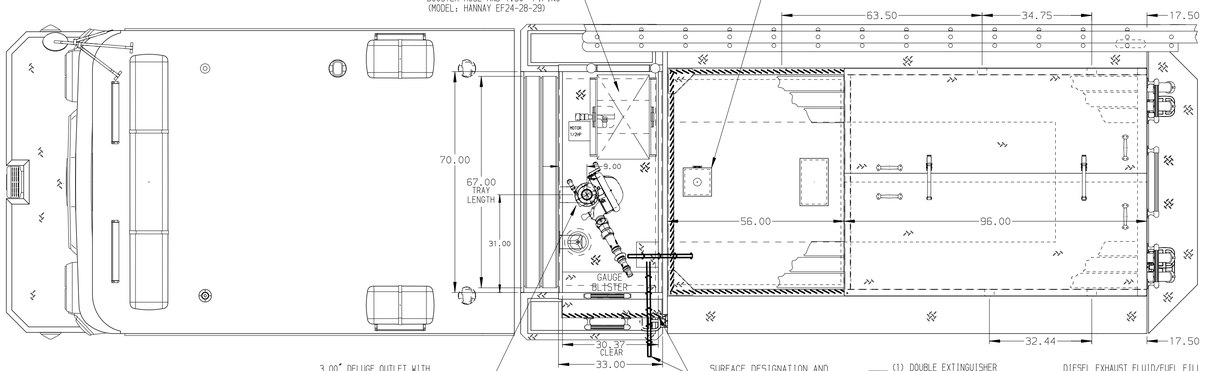

HOSEBED CAPACITIES

1. 200' OF 1.75" D.J.P. HOSE (SINGLE STACK IN POLY TRAY)
2. 300' OF 1.75" D.J.P. HOSE (SINGLE STACK IN POLY TRAY)
3. 1000' OF 5.00" D.J. POLY HOSE
4. 800' OF 2.50" D.J. POLY HOSE
5. 950' OF 3.00" D.J. POLY HOSE

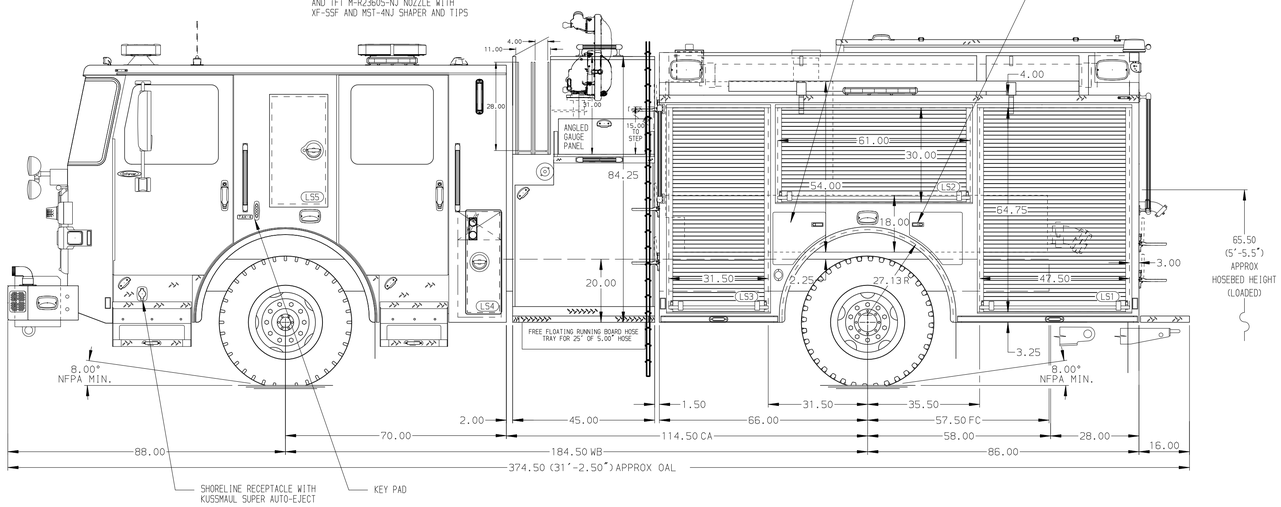

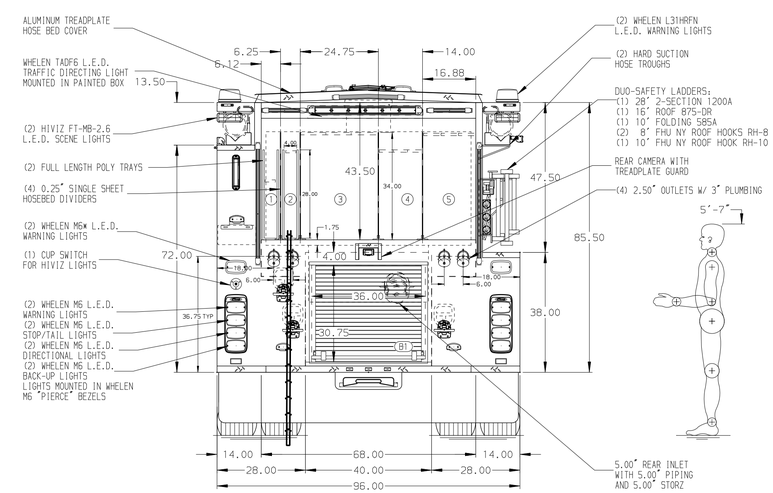

ALUMINUM BODY

SIDE ROLL AND FRONTAL IMPACT PROTECTION

NOTE

DIMENSIONS SHOWN ARE APPROXIMATE AND ARE SUBJECT TO MINOR DEVIATIONS AS MAY OCCUR OR BE NECESSARY IN CONSTRUCTION.
MINOR DETAILS NOT SHOWN.

1. BATTERY CHARGER LOCATED PER SHOP ORDER
2. BATTERY CHARGER INDICATOR LOCATED PER SHOP ORDER
3. DRIP PAN GUARD FOR ROLL-UP DOOR LOCATED PER SHOP ORDER
4. EXTRNAL FOAM SYSTEM LOCATED PER SHOP ORDER
5. AIR INLET/OUTLET WITH DISCONNECT FITTING LOCATED PER SHOP ORDER

REV	DATE	BY	CH
7	29MAY24	JJB	JLL
6	29JAN24	JJB	JGO
5	28DEC23	JJB	JGO
4	25AUG23	JJB	PHA

CHASSIS DATA
MAKE: PIERCE
MODEL: ENFORCER

Pierce MANUFACTURING INC.

TITLE: 1500-D-750P, 730G WATER, 20G FOAM, 152" FDLER PUMPER RS LADDER BRACKETS, (2) CROSSLAYS, DELUGE
FOR: MT. PLEASANT FIRE DEPARTMENT, MT. PLEASANT, SOUTH CAROLINA
DWG NO.: 38156AD

JOB NO.	38156
SCALE	1:24
DATE	
DRAWN BY	JJB 16AUG23
CHECKED BY	PHA 21AUG23
SHEET SIZE	D
SHEET NO.	1 OF 1

View File Created 09-JUL-2024 09:09:30