PUMPER

BODY
Medium Aluminum 2nd Gen Pumper

CHASSIS
Enforcer Chassis

CHASSIS

AXLE,FRONT,CUSTOM
19,500 lb TAK-4 Axle

AXLE,REAR
24,000 lb Dana Axle

ENGINE
450 HP Cummins L9 Engine

TRANSMISSION
Allison 6th Gen, 3000 EVS P

BUMPER
16" Extended Stainless Steel

CAB
7010 Enforcer Cab

BODY

WATER TANK
725 Gallon New York Style Water Tank

COMPT,PUMPER,REAR
30.75" FF Rollup Rear Compt

COMPT,PUMPER,LEFT SIDE
152" Rollup Full Height Front & Rear FDLER

COMPT,PUMPER,RIGHT SIDE
152" Rollup Full Height Front & Rear FDLER

FIRE SUPPRESSION

PUMPHOUSE
48" Control Zone Side Mount

PUMP
1500 GPM Waterous CSU

CROSSLAYS,1.50"
(2) 1.50" Standard Capacity

CROSSLAYS,2.50"
(1) 2.50" Standard Capacity

SPEEDLAYS
Speedlays Not Required

GENERATOR
Generator Not Required

Foam System
Husky 12 Single Agent Foam System

Foam Cell
25 Gallon Foam Cell, Reduced Water

Side Roll and Frontal Impact Protection

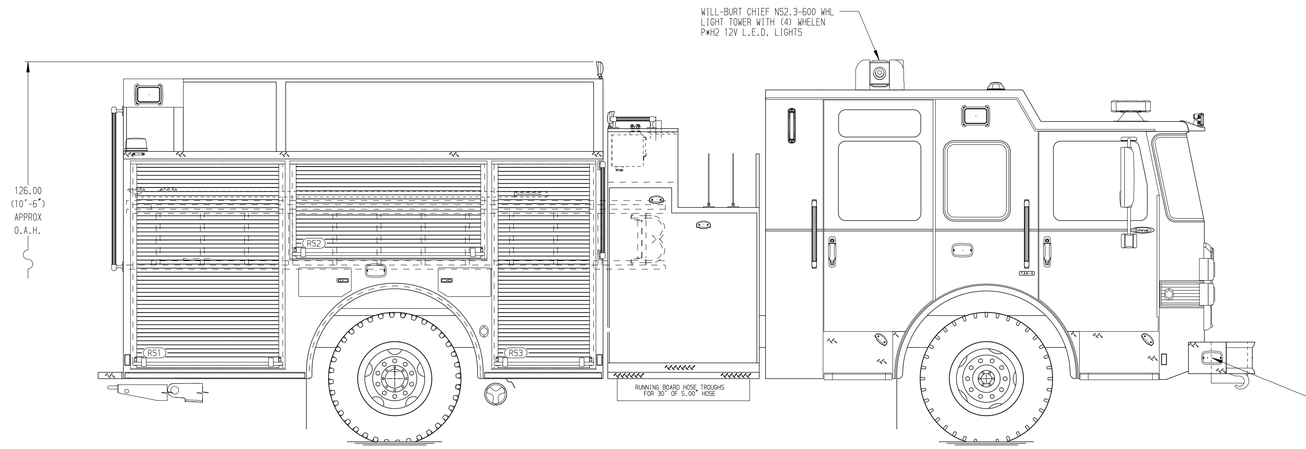

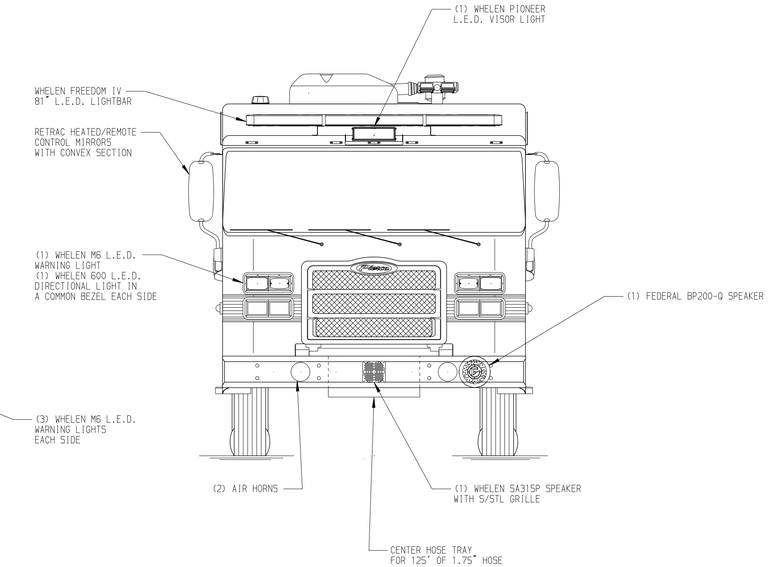

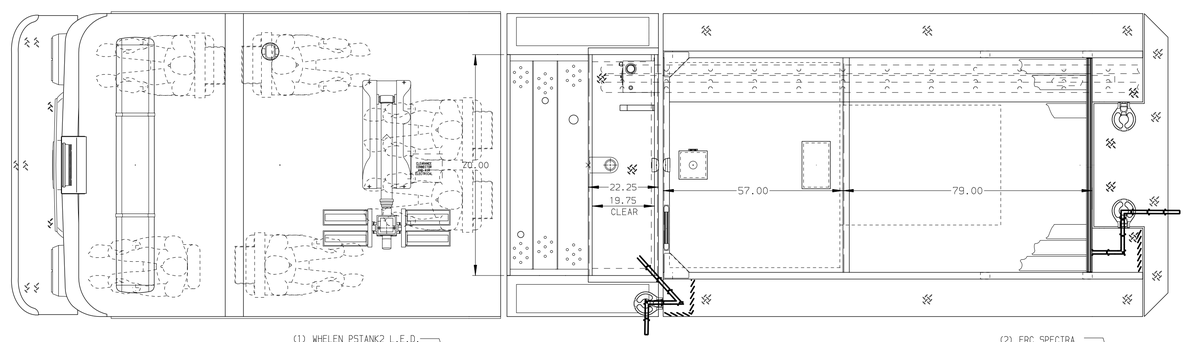

HOSEBED CAPACITY

BED 1
1000' OF 5.00" D.J. POLY HOSE

BED 2
1000' OF 3.00" D.J. POLY HOSE

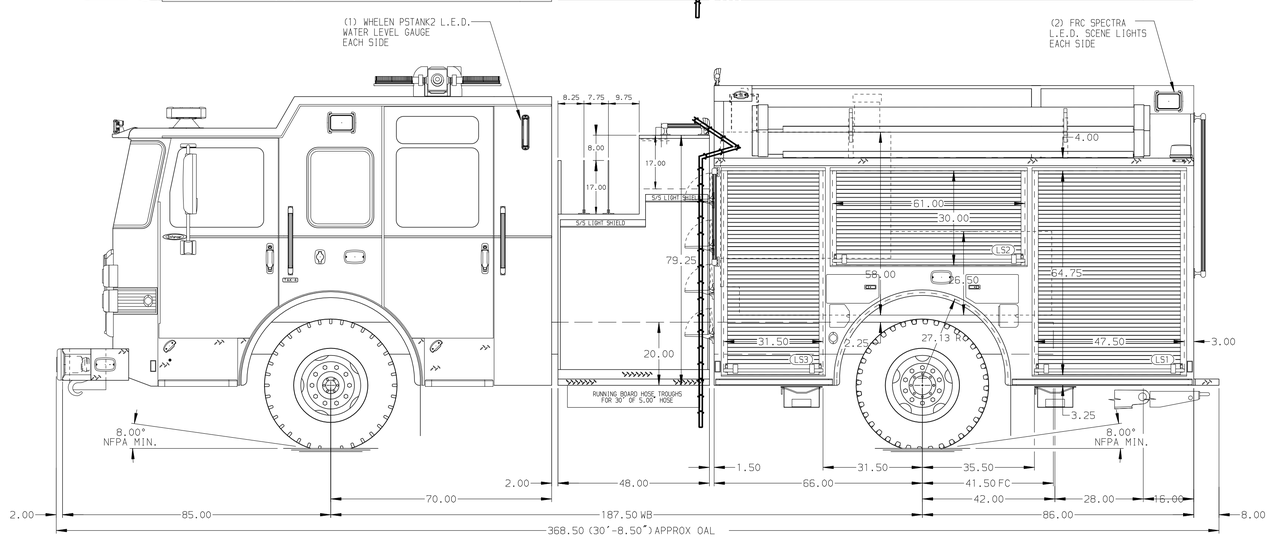

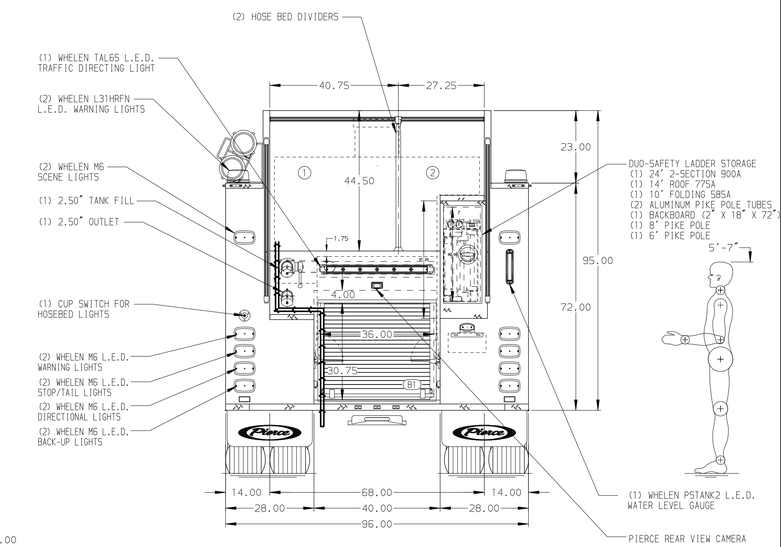

NOTE

DIMENSIONS SHOWN ARE APPROXIMATE AND ARE SUBJECT TO MINOR DEVIATIONS AS MAY OCCUR OR BE NECESSARY IN CONSTRUCTION.
MINOR DETAILS NOT SHOWN.

1. ONE 1.50 OUTLET WITH 2.00 PIPING AND SWIVEL LOCATED IN CENTER BUMPER TRAY
2. SHORELINE RECEPTACLE WITH KUSSMAUL SUPER AUTO-EJECT LOCATED ON DRIVER SIDE OF THE CAB
3. AIR INLET WITH DISCONNECT COUPLING IN THE DRIVER SIDE STEPWELL
4. BATTERY CHARGER LOCATED PER ORDER
5. BATTERY CHARGE INDICATOR LOCATED ON THE DRIVER SIDE SEAT RISER
6. EIGHT ADJUSTABLE SHELVES LOCATED PER ORDER
7. ONE FLOOR MOUNTED SLIDE-OUT TRAY LOCATED PER ORDER
8. PEGBOARD ON BACK WALL LOCATED PER SHOP ORDER

CUSTOMER APPROVAL
APPROVED BY: _____
DATE: _____

REV	DATE	BY	CH
▽	-	-	-

CHASSIS DATA
MAKE: PIERCE
MODEL: ENFORCER

Pierce MANUFACTURING INC.

TITLE: Pierce Pumper Approval Drawing
FOR: Granville Hennepin Fire Protection
DWG NO.: 38187AD

JOB NO.	SCALE	DRAWN BY	CHECKED BY	SHEET SIZE	SHEET NO.
38187	1:24	MMF	COL	D	1 OF 1
	DATE	29AUG22	29AUG22		

View File Created 29-AUG-2022 13:14:51