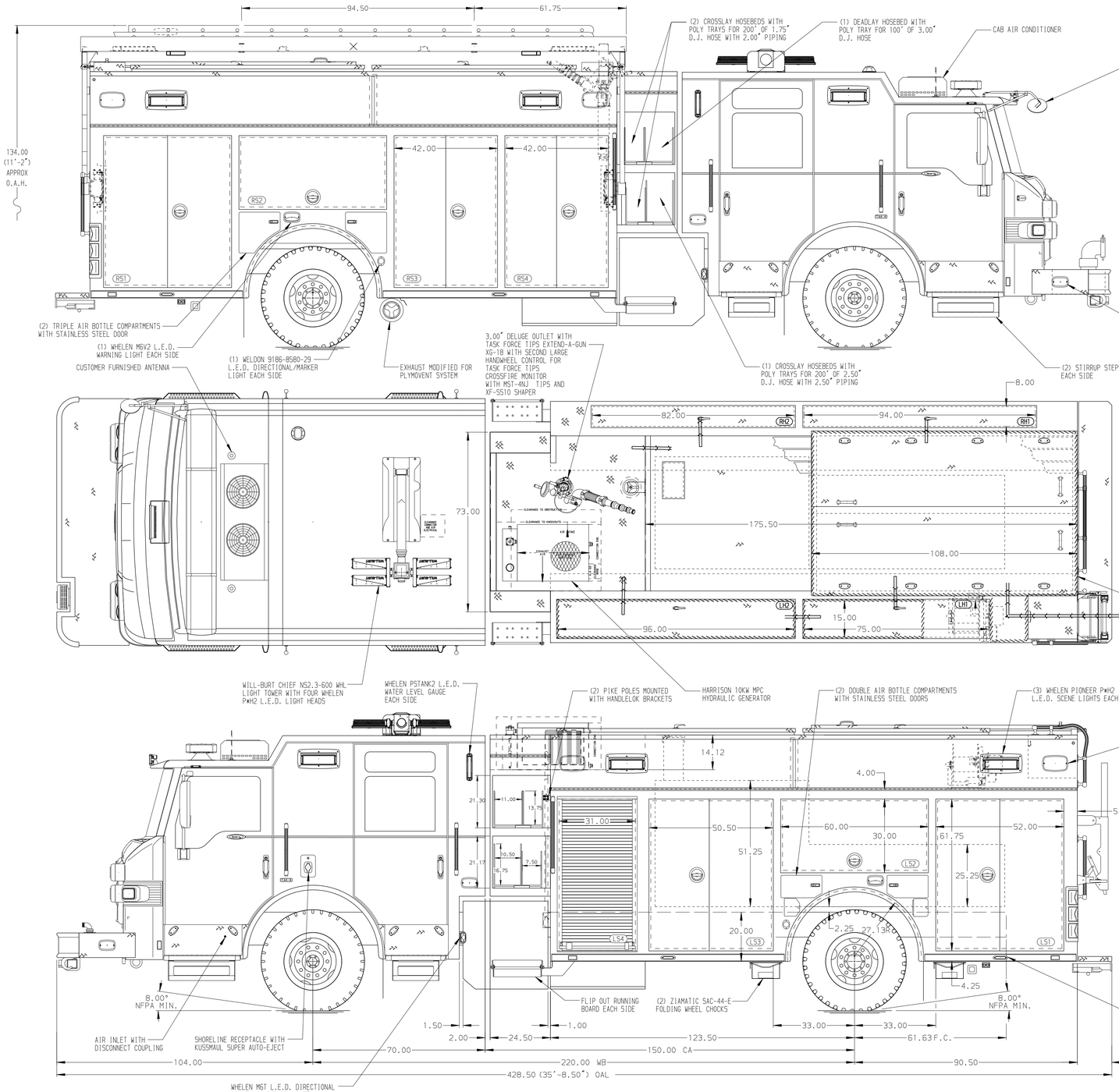


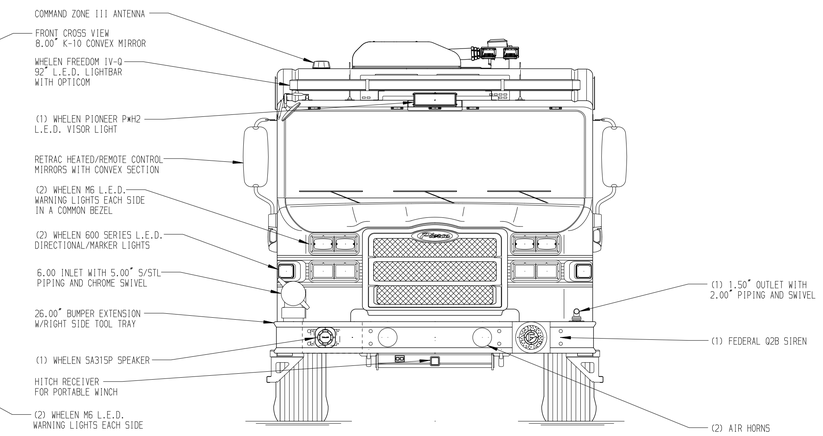


HOSEBED CAPACITIES

1. 100' OF 1.75" D.J. HOSE-TOP
   600' OF 2.50" D.J. HOSE-BOTTOM
2. 1050' OF 5.00" D.J. HOSE
3. 600' OF 2.50" D.J. HOSE

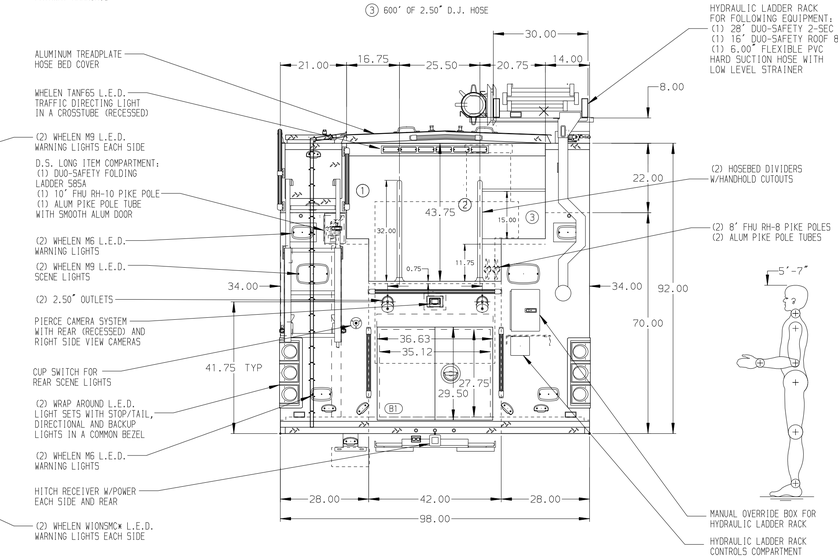


ALUMINUM BODY

SIDE ROLL AND FRONTAL IMPACT PROTECTION

NOTE

DIMENSIONS SHOWN ARE APPROXIMATE AND ARE SUBJECT TO MINOR DEVIATIONS AS MAY OCCUR OR BE NECESSARY IN CONSTRUCTION.
MINOR DETAILS NOT SHOWN.

1. INTERLUBE LUBE SYSTEM PUMP LOCATED PER SHOP ORDER
2. ONE 9000# WARN PORTABLE RECEIVER TYPE WINCH
3. BATTERY CHARGER LOCATED BEHIND DRIVER SEAT
4. BATTERY CHARGER INDICATOR ON BRACKET NEAR DRIVER'S SEAT
5. ELEVEN FULL WIDTH/DEPTH ADJUSTABLE SHELVES LOCATED PER SHOP ORDER
6. NINE ADJUSTABLE SHELVES WITH SPECIAL HEIGHT SIDES IN LOCATED PER SHOP ORDER
7. ONE ADJUSTABLE TILT/SLIDE-OUT FULL WIDTH/DEPTH TRAY LOCATED PER SHOP ORDER
8. TWO FLOOR MOUNTED SLIDE-OUT TRAYS LOCATED PER SHOP ORDER
9. ONE TOOLBOARD TRAY LOCATED PER SHOP ORDER
10. ONE "L" SHAPED PARTITION LOCATED PER SHOP ORDER
11. ALUMINUM TREADPLATE ON THE FLOOR LOCATED PER SHOP ORDER
12. FIVE POLY TOOL BOXES IN LOCATED PER SHOP ORDER
13. ALUMINUM PEGBOARD ON WALLS OF COMPARTMENTS PER SHOP ORDER
14. CIRCUIT BREAKER PANEL LOCATED PER SHOP ORDER
15. ONE HANNAY ELECTRIC REWIND CORD REEL MODEL 1618-17-18 WITH 200' OF 10/4 CABLE LOCATED IN LH1
16. THREE 120V DUPLEX RECEPTACLES LOCATED PER SHOP ORDER
17. RESPONSE READY 4 DRAWER ASSEMBLY LOCATED PER SHOP ORDER
18. THREE VERTICAL PEGBOARD PARTITION LOCATED PER SHOP ORDER
19. ONE PIKE POLE TUBE LOCATED PER SHOP ORDER

| REV | DATE | BY | CH |
|---|---|---|---|
| 3 | 24OCT23 | BTH | NPE |
| 2 | 08SEP23 | BTH | NPE |
| 1 | 28APR23 | JWO | NPE |

CHASSIS DATA
MAKE: PIERCE
MODEL: VELOCITY

Pierce MANUFACTURING INC.

TITLE: 1500-D-750,214",FULL HEIGHT,FULL DEPTH L.S. & R.S. (3) X-LAYS,(1) DEADLAY,DELUGE,LIGHT TOWER,CABLE REEL

FOR: PLAINFIELD FIRE PROTECTION DISTRICT
PLAINFIELD, ILLINOIS

DWG NO. 38188AD

| JOB NO. | SCALE | DRAWN BY | DATE | CHECKED BY | DATE | SHEET SIZE | SHEET NO. |
|---|---|---|---|---|---|---|---|
| 38188 | 1:24 | JWO | 04APR23 | CZA | 04ARP23 | D | 1 OF 1 |

View File Created 02-NOV-2023 09:02:01