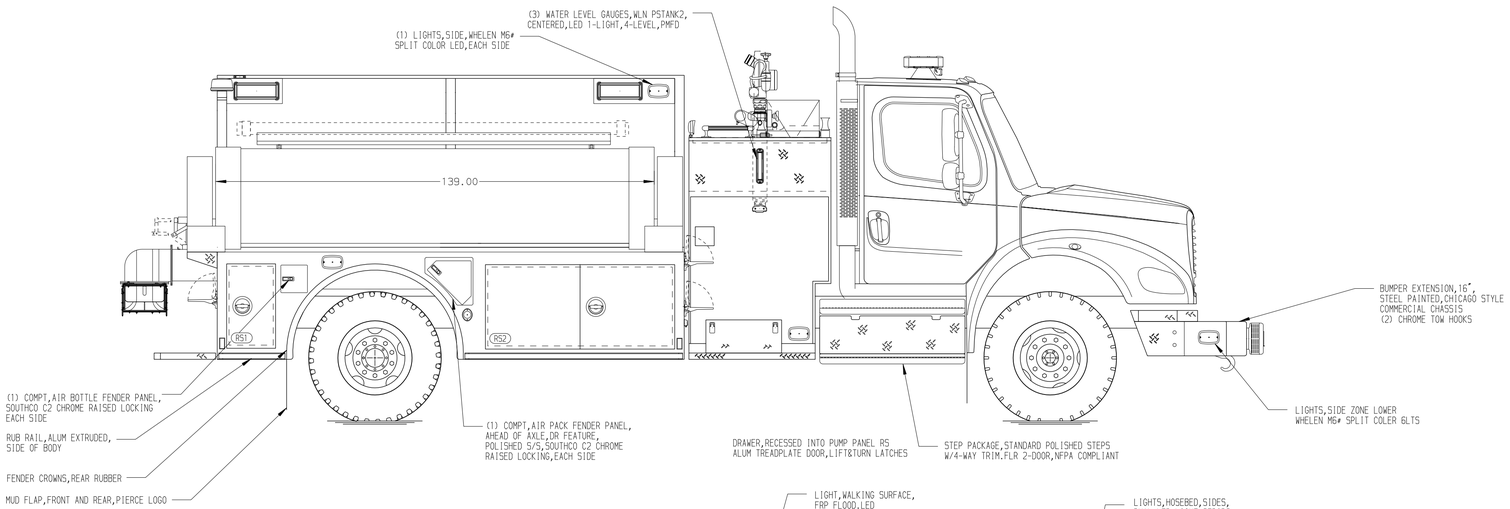

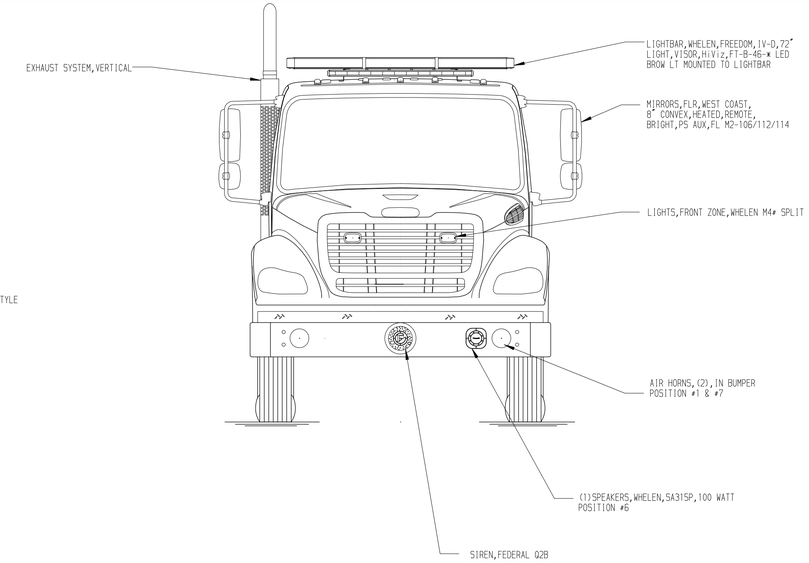

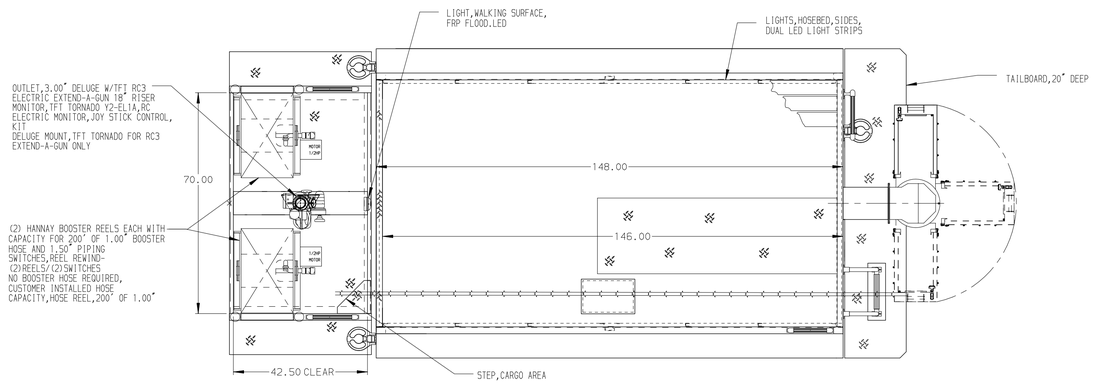

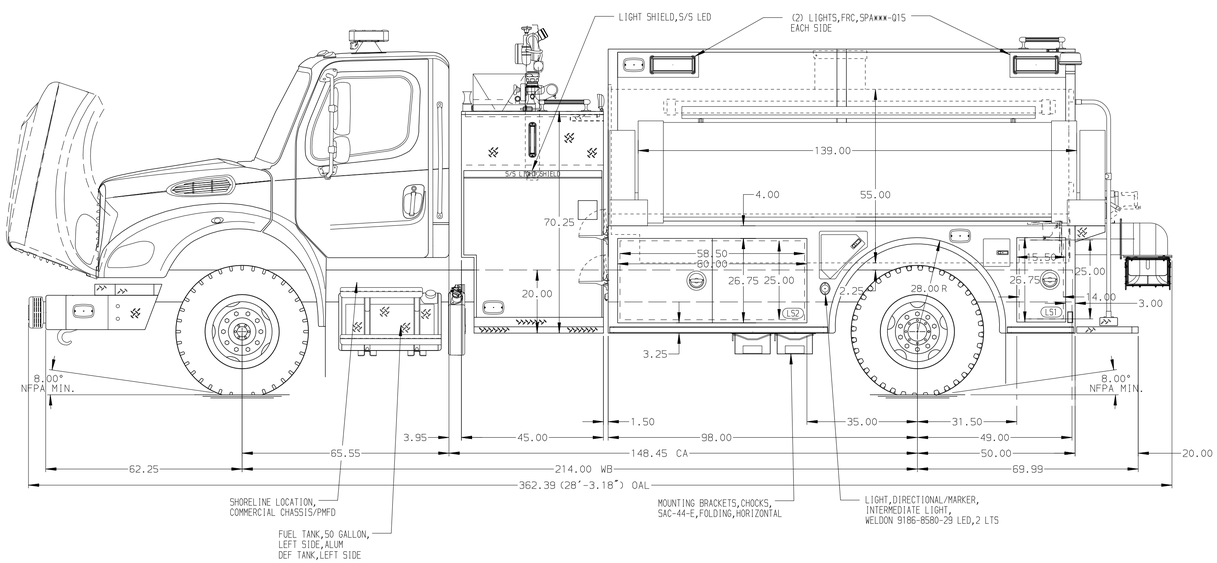

HOSEBED CAPACITIES
(1) 500' OF 2.50" D.J. POLYESTER HOSE

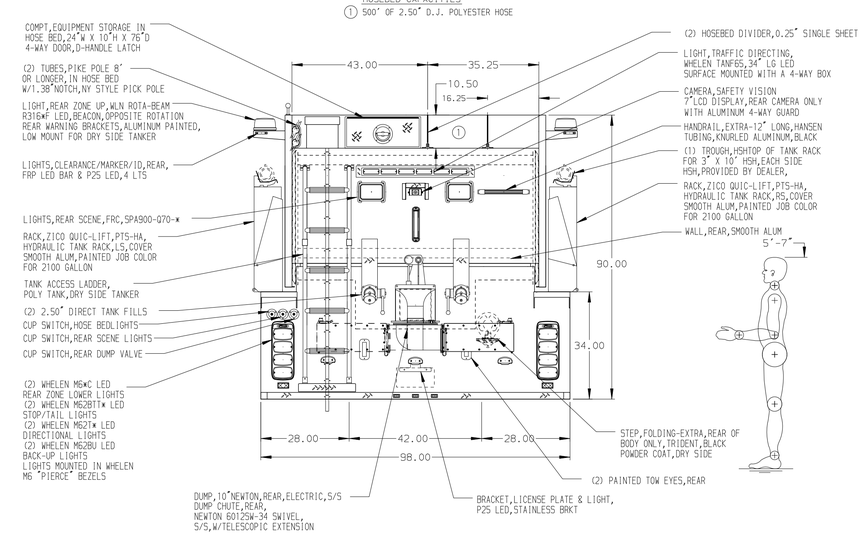

ALUMINUM BODY

NOTE
DIMENSIONS SHOWN ARE APPROXIMATE AND ARE SUBJECT TO MINOR DEVIATIONS AS MAY OCCUR OR BE NECESSARY IN CONSTRUCTION.
MINOR DETAILS NOT SHOWN.

REV	DATE	BY	CH
D	13SEP23	RWR	JAP
C	11JUN23	RWR	JAP
B	12APR23	RHU	JAP
A	28JAN23	JLA	AJA

CHASSIS DATA
MAKE: FL
MODEL: M2-112

Pierce MANUFACTURING INC.
BRADENTON, FLORIDA

TITLE: 300-D-2000 POLY 148'DRYSIDE BODY 45"SIDE CONTROL
FOR: TAYLORVILLE FIRE DEPARTMENT TAYLORVILLE, ILLINOIS
DWG NO.: 38200AD

JOB NO.	38200
SCALE	1:24
DATE	
DRAWN BY	JLA 14JAN23
CHECKED BY	AJA 17JAN23
SHEET SIZE	D
SHEET NO.	1 OF 1

View File Created 30-OCT-2023 09:27:33