PUMPER

BODY
Medium Aluminum 2nd Gen Pumper

CHASSIS
Enforcer Chassis

CHASSIS

AXLE, FRONT, CUSTOM
22,800 Lb TAK-4 Axle

AXLE, REAR
27,000 Lb Dana Axle

ENGINE
450 HP Cummins L9 Engine

TRANSMISSION
Allison 6th Gen, 3000 EVS P

BUMPER
19" Extended Painted Steel

CAB
7010 Enforcer Cab

BODY

WATER TANK
750 Gallon Poly Water Tank

COMPT, PUMPER, REAR
44.50" FF Rollup Rear Compt

COMPT, PUMPER, LEFT SIDE
152" Rollup Full Height Front & Rear FDLER

COMPT, PUMPER, RIGHT SIDE
152" Rollup Full Height Front & Rear FDLER

FIRE SUPPRESSION

PUMPHOUSE
45" Control Zone Side Mount

PUMP
1500 GPM Waterous CSU

CROSSLAYS, 1.50"
(2) 1.50" Standard Capacity

CROSSLAYS, 2.50"
(1) 2.50" Standard Capacity

SPEEDLAYS
Speedlays Not Required

GENERATOR
Generator Not Required

Foam System
Husky 3 Single Agent Foam System

Foam Cell
20 Gallon Foam Cell, Reduced Water

Side Roll and Frontal Impact Protection

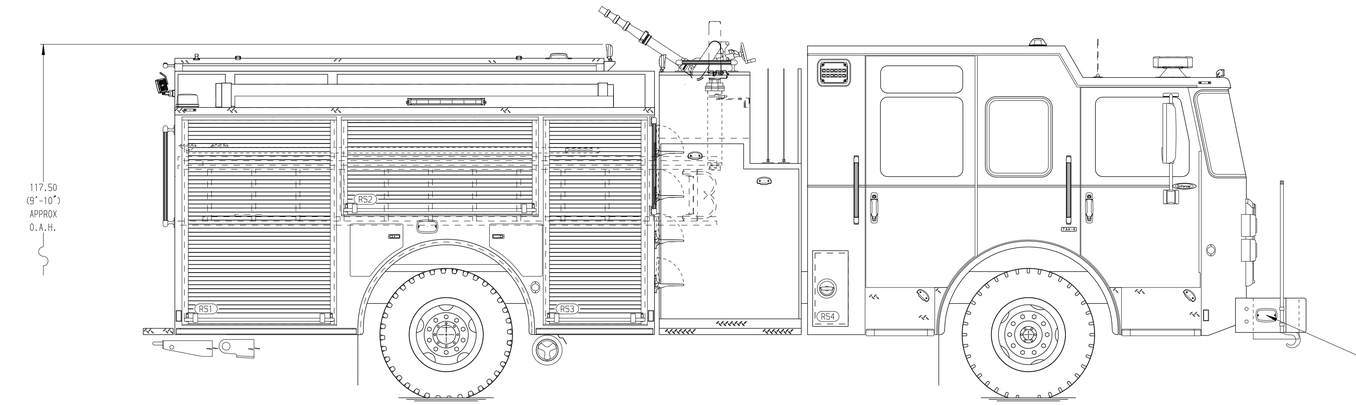

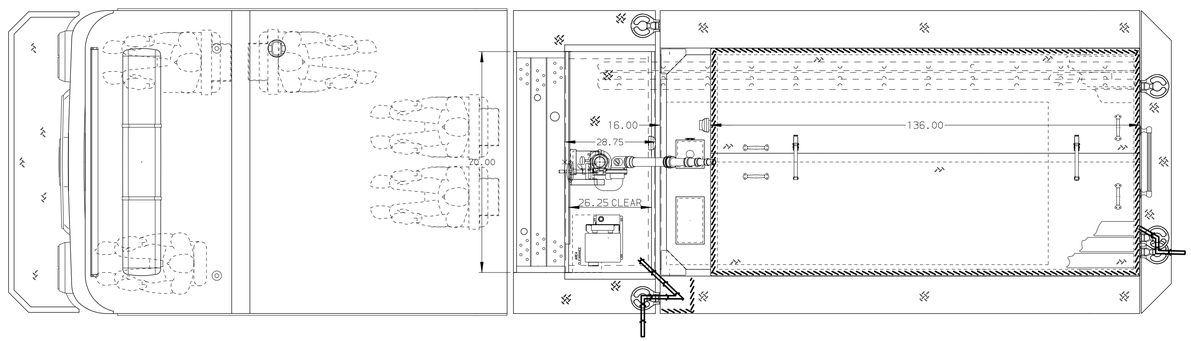

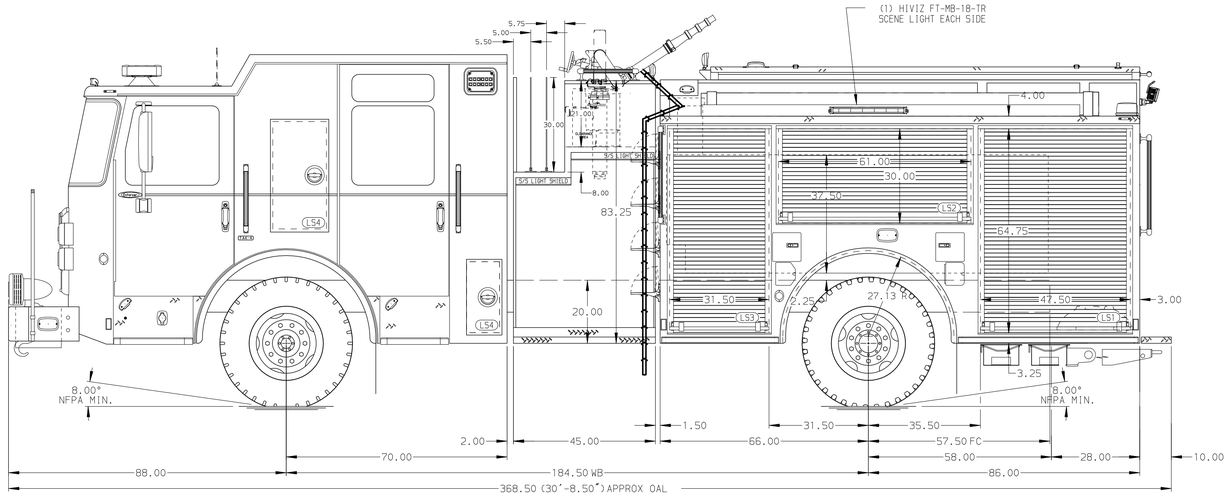

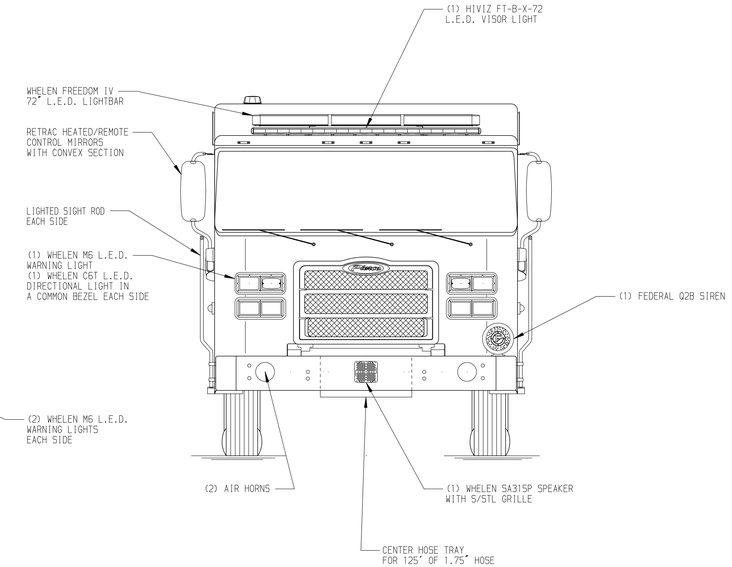

HOSEBED CAPACITY

BED 1
300' OF 2.50" D.J. POLY HOSE

BED 2
1000' OF 4.00" D.J. POLY HOSE

BED 3
300' OF 2.50" D.J. POLY HOSE

BED 4
300' OF 1.75" D.J. POLY HOSE

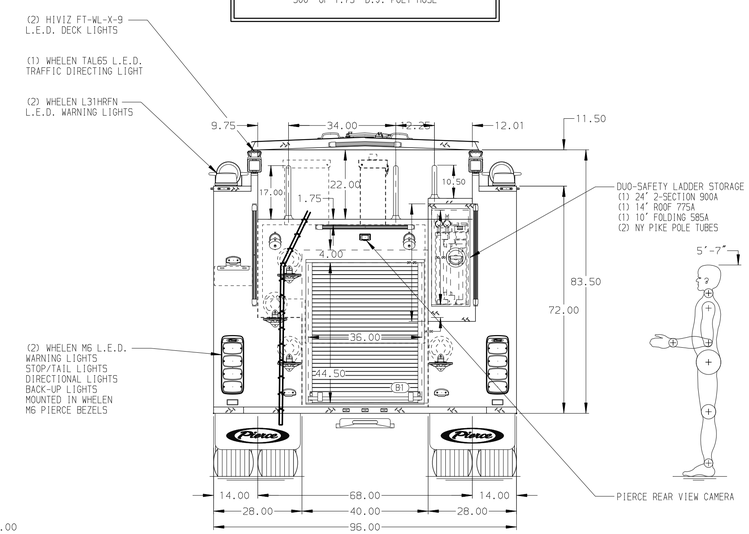

MAXIMUM O.A.H. 118.00"

MAXIMUM O.A.L. 372.00"

CUSTOMER APPROVAL

APPROVED BY: _____

DATE: _____

Pierce MANUFACTURING INC.

JOB NO.	38226		
SCALE	1:24	DATE	
CHASSIS DATA	TITLE	Pierce Pumper Approval Drawing -	
MAKE PIERCE	FOR	Winchester Fire Department -	
MODEL ENFORCER	DWG NO.	38226AD	
DRAWN BY MMF	22AUG22		
CHECKED BY COL	23AUG22		
SHEET SIZE D	SHEET NO. 1 OF 1		

REV	DATE	BY	CH
-	-	-	-

NOTE

DIMENSIONS SHOWN ARE APPROXIMATE AND ARE SUBJECT TO MINOR DEVIATIONS AS MAY OCCUR OR BE NECESSARY IN CONSTRUCTION.
MINOR DETAILS NOT SHOWN.

1. ONE 1.50 OUTLET WITH 2.00 PIPING AND SWIVEL LOCATED IN CENTER BUMPER TRAY
2. SHORELINE RECEPTACLE WITH KUSSMAUL SUPER AUTO-EJECT LOCATED ON DRIVER SIDE STEPWELL
3. AIR INLET WITH DISCONNECT COUPLING IN THE DRIVER SIDE STEPWELL
4. BATTERY CHARGER LOCATED PER ORDER
5. BATTERY CHARGE INDICATOR LOCATED ON THE DRIVER SIDE SEAT RISER
6. EIGHT ADJUSTABLE SHELVES LOCATED PER ORDER
7. FOUR FLOOR MOUNTED SLIDE-OUT TRAY LOCATED PER ORDER
8. ONE CTECH FOUR DRAWER ASSEMBLY LOCATED PER SHOP ORDER
9. TWO SWING-OUT TOOLBOARDS LOCATED PER SHOP ORDER
10. PEGBOARD ON BACK WALL PER SHOP ORDER
11. STORAGE COMPARTMENT LOCATED PER SHOP ORDER
12. STOKES BASKET STORAGE LOCATED PER SHOP ORDER

View File Created 23-AUG-2022 11:49:46