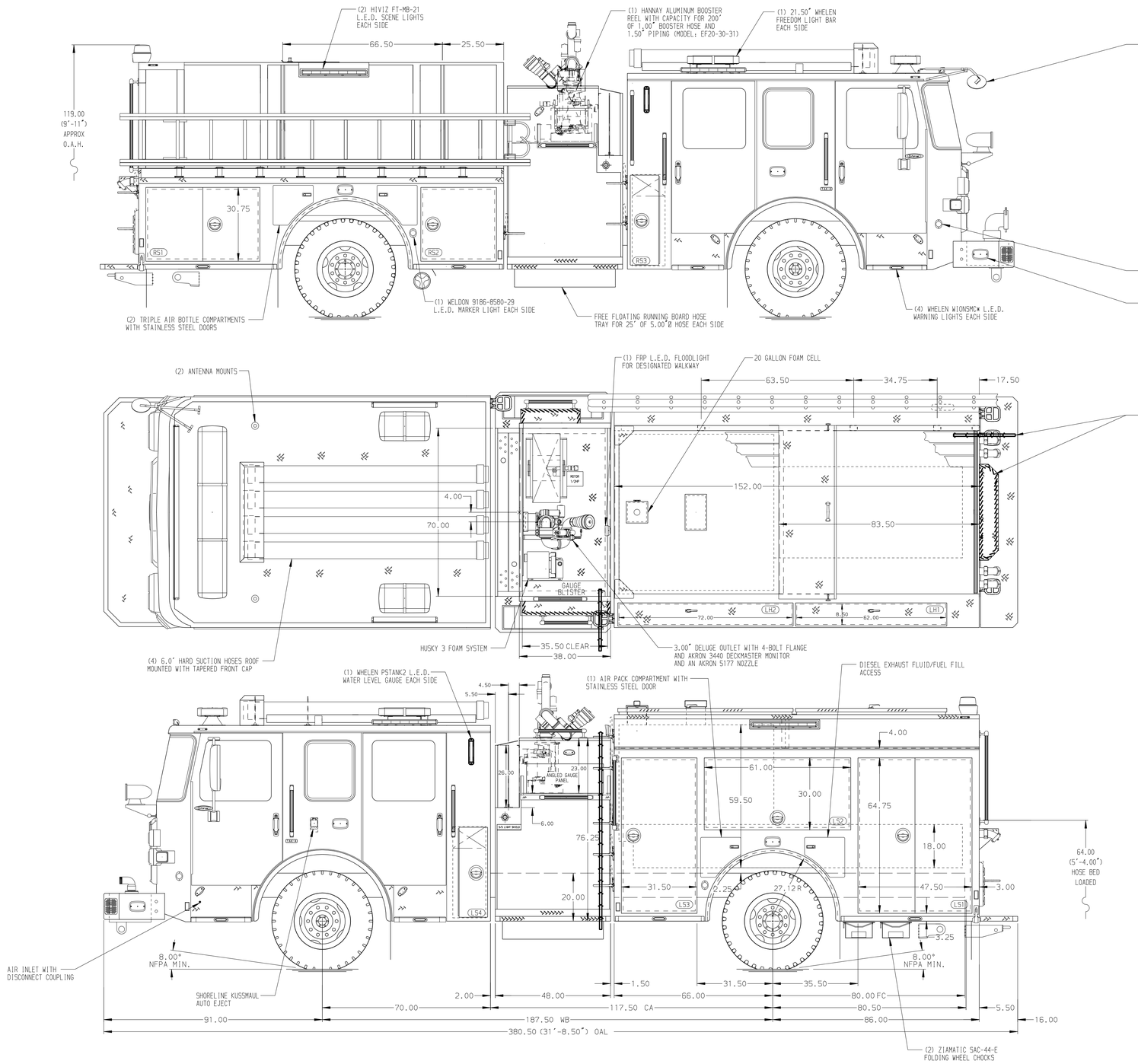

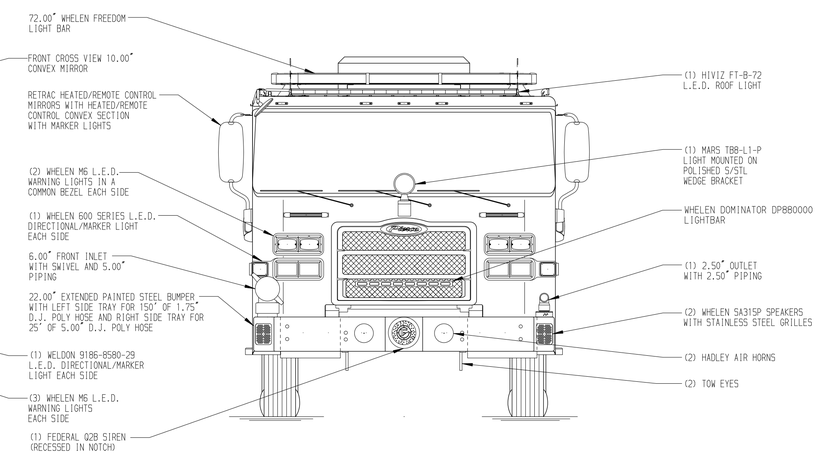

HOSEBED CAPACITIES

1. 300' OF 1.75" D.J. POLY HOSE
2. 400' OF 2.50" D.J. POLY HOSE
3. 500' OF 3.00" D.J. POLY HOSE
4. 1000' OF 5.00" D.J. POLY HOSE
5. 300' OF 1.75" D.J. POLY HOSE

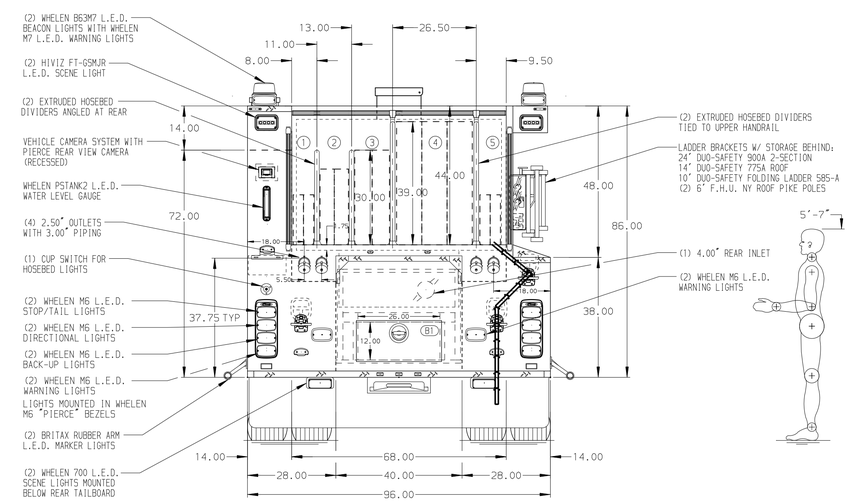

ALUMINUM BODY | MAXIMUM O.A.L. 381.00" | MAXIMUM O.A.H. 120.00" | SIDE ROLL AND FRONTAL IMPACT PROTECTION

NOTE

DIMENSIONS SHOWN ARE APPROXIMATE AND ARE SUBJECT TO MINOR DEVIATIONS AS MAY OCCUR OR BE NECESSARY IN CONSTRUCTION.
MINOR DETAILS NOT SHOWN.

1. ALUMINUM 4-WAY ON CAB ROOF
2. BATTERY CHARGER LOCATED BEHIND DRIVER'S SEAT
3. BATTERY CHARGER INDICATOR LOCATED ON DRIVER'S SEAT RISER
4. DUAL L.E.D. LIGHT STRIPS LOCATED IN HOSE BED
5. L.E.D. LIGHT STRIP LOCATED ON THE FRONT OF THE HOSEBED
6. PULL STRAPS ON DOORS IN COMPARTMENTS PER SHOP ORDER
7. REVERSED HINGED DOOR ON COMPARTMENT PER SHOP ORDER
8. THREE FULL WIDTH/DEPTH ADJUSTABLE SHELVES IN COMPARTMENT PER SHOP ORDER
9. TWO ADJUSTABLE SLIDE-OUT TRAYS IN COMPARTMENTS PER SHOP ORDER
10. FOUR FLOOR MOUNTED SLIDE-OUT TRAYS IN COMPARTMENTS PER SHOP ORDER
11. ALUMINUM SWING-OUT TOOLBOARD WITH PAC TRAC IN COMPARTMENT PER SHOP ORDER
12. SIX 120V DUPLEX RECEPTACLE LOCATED PER SHOP ORDER

REV	DATE	BY	CH
1	14JUN24	ARI	ZWE
2	24MAY24	ARI	ZWE

CHASSIS DATA
MAKE: PIERCE
MODEL: ENFORCER

Pierce MANUFACTURING INC.

TITLE: 2000-D-1000P, 980 GAL OF WATER W/ 20 GAL FOAM CELL 152" BODY, LADDER BRACKETS, (2) CROSSLAY, DELUGE
FOR: BLADES VOLUNTEER FIRE COMPANY BLADES, DELAWARE
DWG NO.: 38239AD

JOB NO.	38239
SCALE	1:24
DATE	
DRAWN BY	ARI 130CT23
CHECKED BY	CDU 130CT23
SHEET SIZE	D
SHEET NO.	1 OF 1

View File Created 14-JUN-2024 12:42:43