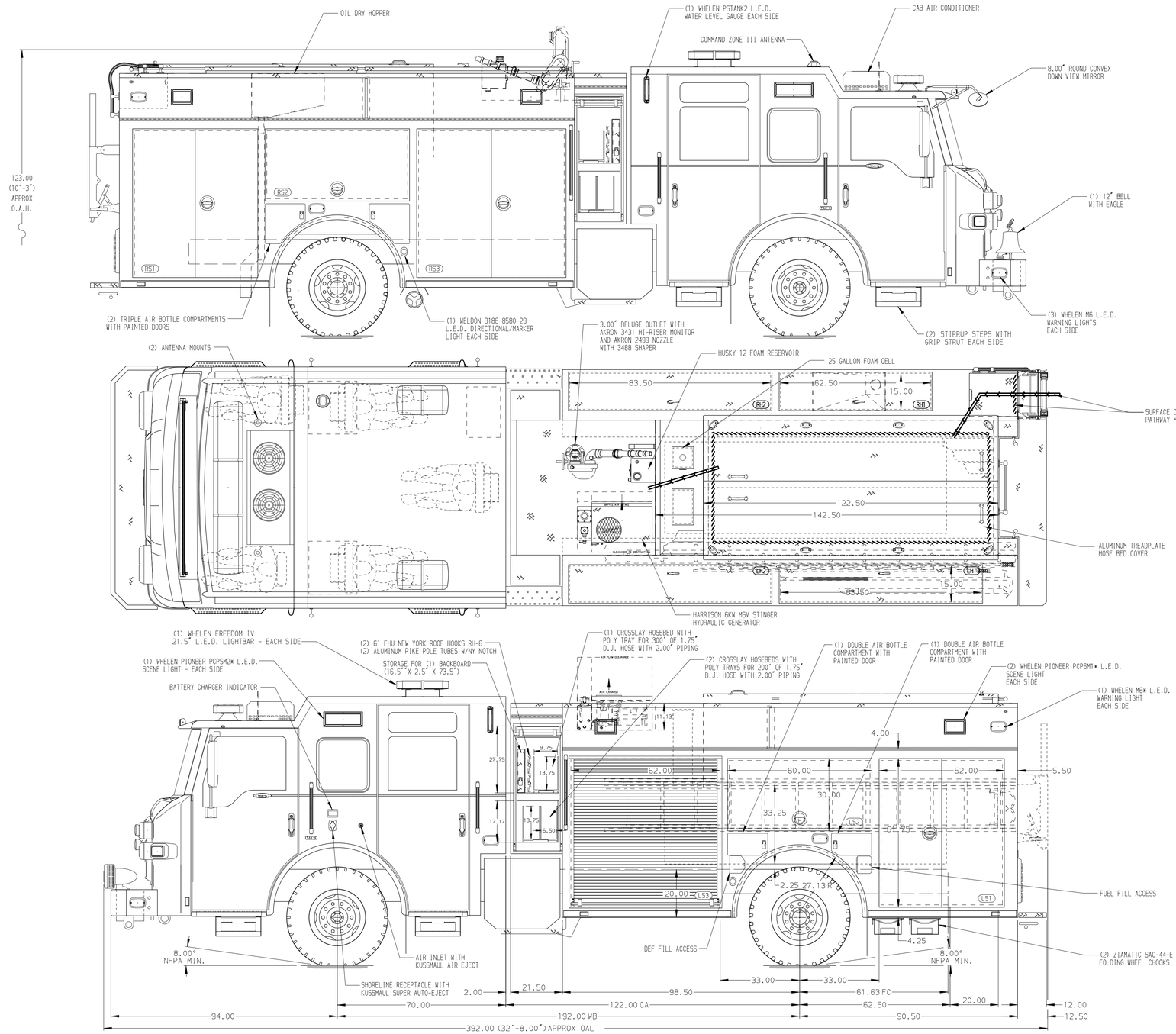

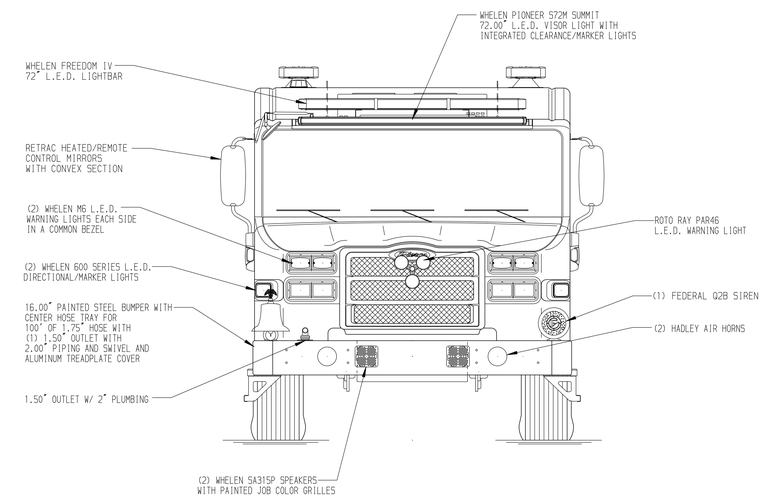

HOSEBED CAPACITIES
1. 1000' OF 5.00" D.J. POLY HOSE
2. 300' OF 2.50" D.J. POLY HOSE
3. 300' OF 3.00" D.J. POLY HOSE

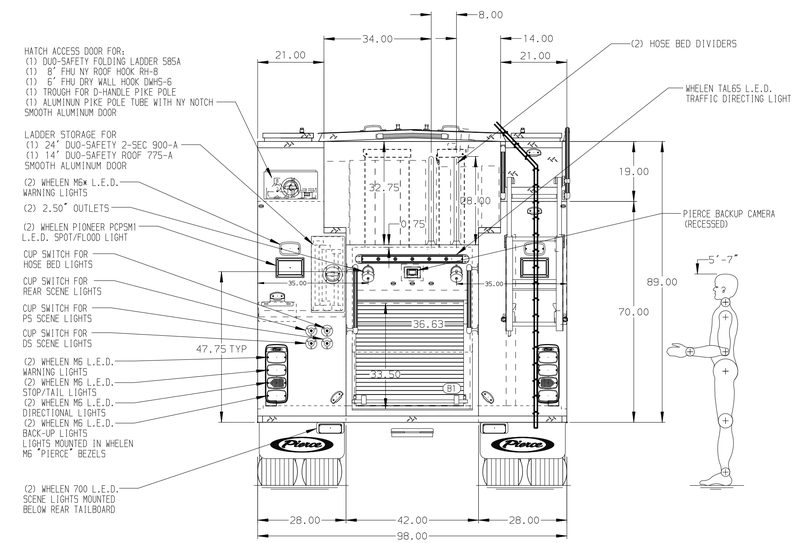

ALUMINUM BODY

SIDE ROLL AND FRONTAL IMPACT PROTECTION

NOTE
DIMENSIONS SHOWN ARE APPROXIMATE AND ARE SUBJECT TO MINOR DEVIATIONS AS MAY OCCUR OR BE NECESSARY IN CONSTRUCTION.
MINOR DETAILS NOT SHOWN.

1. BATTERY CHARGER LOCATED BEHIND DRIVER'S SEAT
2. DUAL L.E.D. LIGHT STRIPS LOCATED IN HOSE BED

REV	DATE	BY	CH
D	16APR24	ARI	CLM
C	18JAN24	ARI	JLL
B	29NOV23	ARI	JLL
A	26OCT23	ARI	SJS

CHASSIS DATA
MAKE: PIERCE
MODEL: VELOCITY FR

Pierce MANUFACTURING INC.

TITLE: 1500-D-525P, 500G WATER W/25G FOAM, 189" RESCUE PUC (3) XLAYS, LADDERS THRU BODY, DELUGE, GENERATOR

FOR: LEAWOOD FIRE DEPARTMENT, LEAWOOD, KANSAS

DWG NO.: 38242AD-SH1

JOB NO.	38242
SCALE	1:24
DATE	
DRAWN BY	ARI 130CT23
CHECKED BY	SJS 120CT23
SHEET SIZE	D
SHEET NO.	1 OF 2

View File Created 22-APR-2024 07:06:29