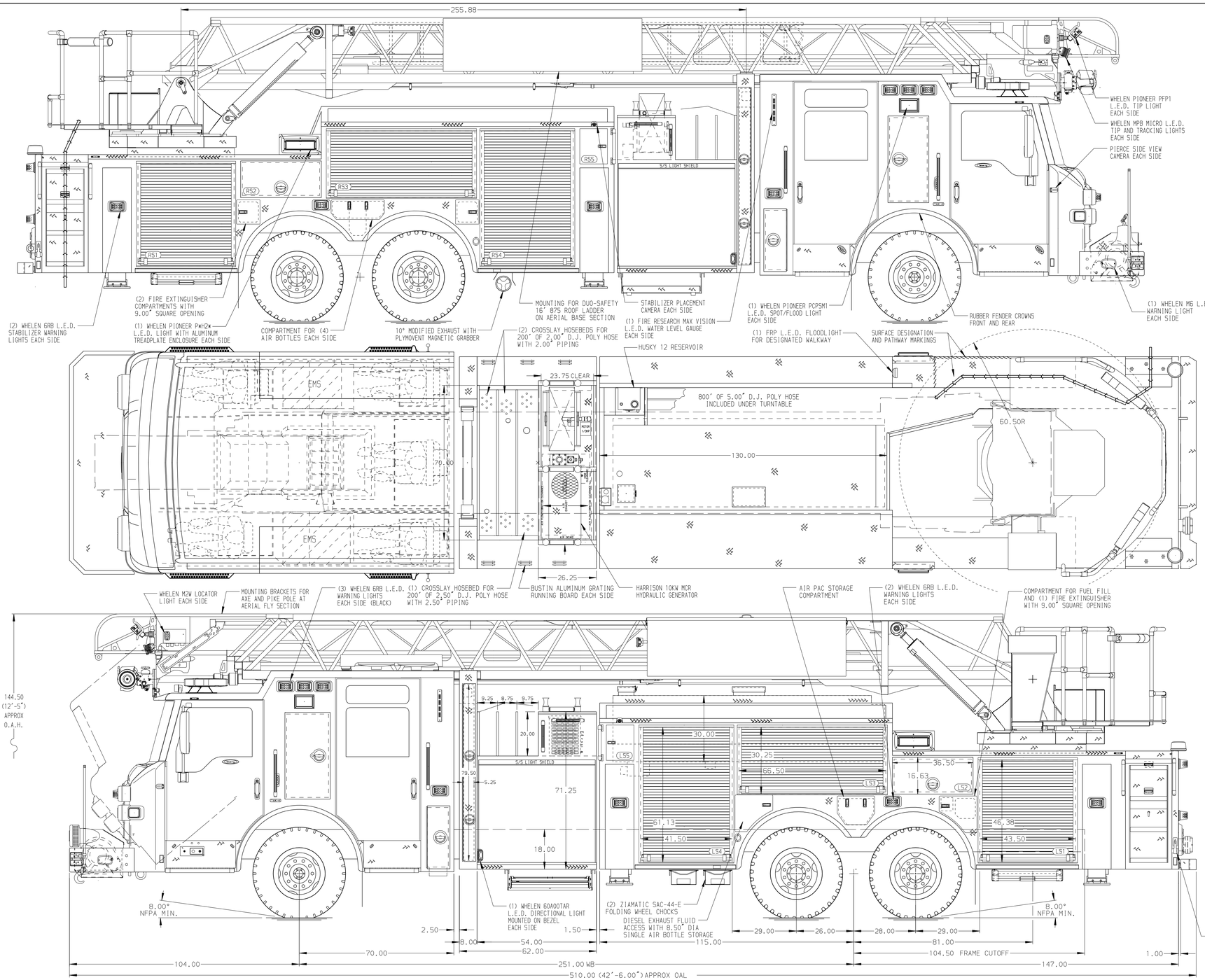

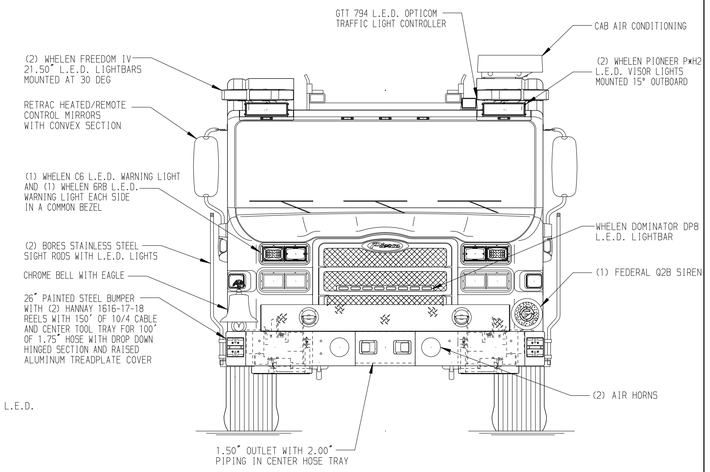

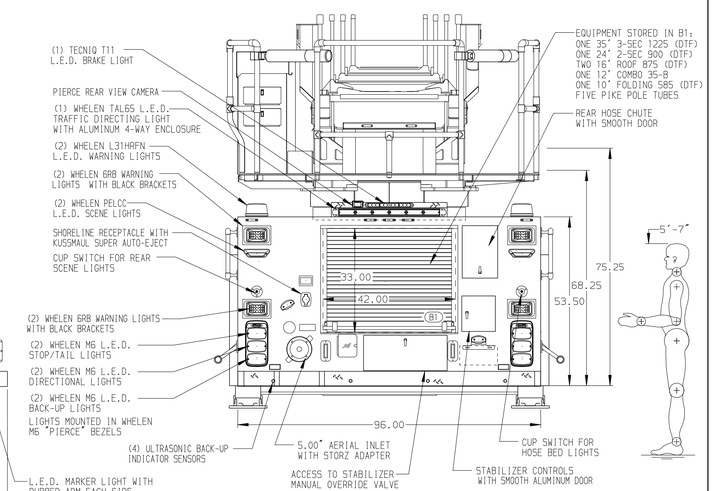

ALUMINUM BODY

MAXIMUM O.A.H. 144.50"

NOTE

DIMENSIONS SHOWN ARE APPROXIMATE AND ARE SUBJECT TO MINOR DEVIATIONS AS MAY OCCUR OR BE NECESSARY IN CONSTRUCTION.
MINOR DETAILS NOT SHOWN.

1. BATTERY CHARGER LOCATED IN CREW CAB SEAT RISER
2. BATTERY CHARGER INDICATOR LOCATED AT DRIVER'S REAR BULKHEAD
3. AIR INLET WITH DISCONNECT COUPLING LOCATED AT DRIVER'S SIDE STEP AREA
4. AIR OUTLET WITH SHUT-OFF VALVE LOCATED AT DRIVER'S SIDE STEP AREA
5. DUAL L.E.D. LIGHT STRIPS LOCATED IN HOSE BED
6. JUMPER STUDS AT DRIVER'S SIDE CAB STEP
7. ELASTIC PULL STRAP FOR EACH ROLL-UP DOOR
8. DRIP PAN GUARD FOR EACH ROLL-UP DOOR
9. SIX ADJUSTABLE FULL WIDTH/FULL DEPTH SHELVES IN COMPARTMENTS PER SHOP ORDER
10. ONE ADJUSTABLE TILTING SLIDE-OUT TRAY IN COMPARTMENT PER SHOP ORDER
11. FOUR FULL WIDTH/DEPTH FLOOR MOUNTED SLIDE-OUT TRAYS WITH SIDE SLIDES IN COMPARTMENTS PER SHOP ORDER
12. ONE ALUMINUM SWING-OUT TOOLBOARD WITH PAC TRAC IN COMPARTMENT PER SHOP ORDER
13. PAC TRAC ON THE REAR WALL OF COMPARTMENTS PER SHOP ORDER
14. TWO 1.00" RETAINING LIPS IN COMPARTMENTS PER SHOP ORDER
15. TRIDENT FOLDING STEPS ON AERIAL DEVICE
16. STABILIZERS MODIFIED FOR 18" GROUND PENETRATION
17. L.E.D. LIGHTING ON AERIAL LADDER SECTIONS
18. 120V POWER TO AERIAL TIP
19. 2-WAY INTERCOM SYSTEM BETWEEN AERIAL TIP AND TURNTABLE
20. CIRCUIT BREAKER PANEL WITH COVER LOCATED IN COMPARTMENT PER SHOP ORDER
21. AIR HORN CONTROL AT AERIAL TURNTABLE
22. 1500 GPM HIGH FLOW WATERWAY
23. 14.00 LIMITED RETRACTION ON AERIAL FLY SECTION
24. LIFTING EYE ROPE RESCUE ATTACHMENT AT AERIAL TIP
25. AERIAL PEDESTAL RAISED 3.00"
26. HANNAY ALUMINUM BOOSTER REEL MODEL SBEF20-30-31 WITH 150' OF 1.00 HOSE AND 1.50" PIPING LOCATED ABOVE PUMP WITH THREE ROLLER ASSEMBLIES
27. TWO FORWARD FACING ROSCO CAMERAS PER ORDER

REV	DATE	BY	CH
1	08MAR24	LWE	JBL
2	09FEB24	LWE	SMA
3	21DEC23	LWE	SMA

CHASSIS DATA
MAKE: PIERCE
MODEL: VELOCITY

Pierce MANUFACTURING INC.

TITLE: 107' ASCENDANT AERIAL LADDER AND BODY ASSEMBLY
520 GALLON TANK, 500 GAL. WATER/20 GAL. FOAM

FOR: TULSA FIRE DEPARTMENT
TULSA, OKLAHOMA

DWG NO.: 38244AD-SH1

JOB NO.	38244 01-02
SCALE	1:24
DATE	
DRAWN BY	LWE 30AUG23
CHECKED BY	SMA 19SEP23
SHEET SIZE	D
SHEET NO.	1 OF 2

View File Created 08-MAR-2024 13:43:44