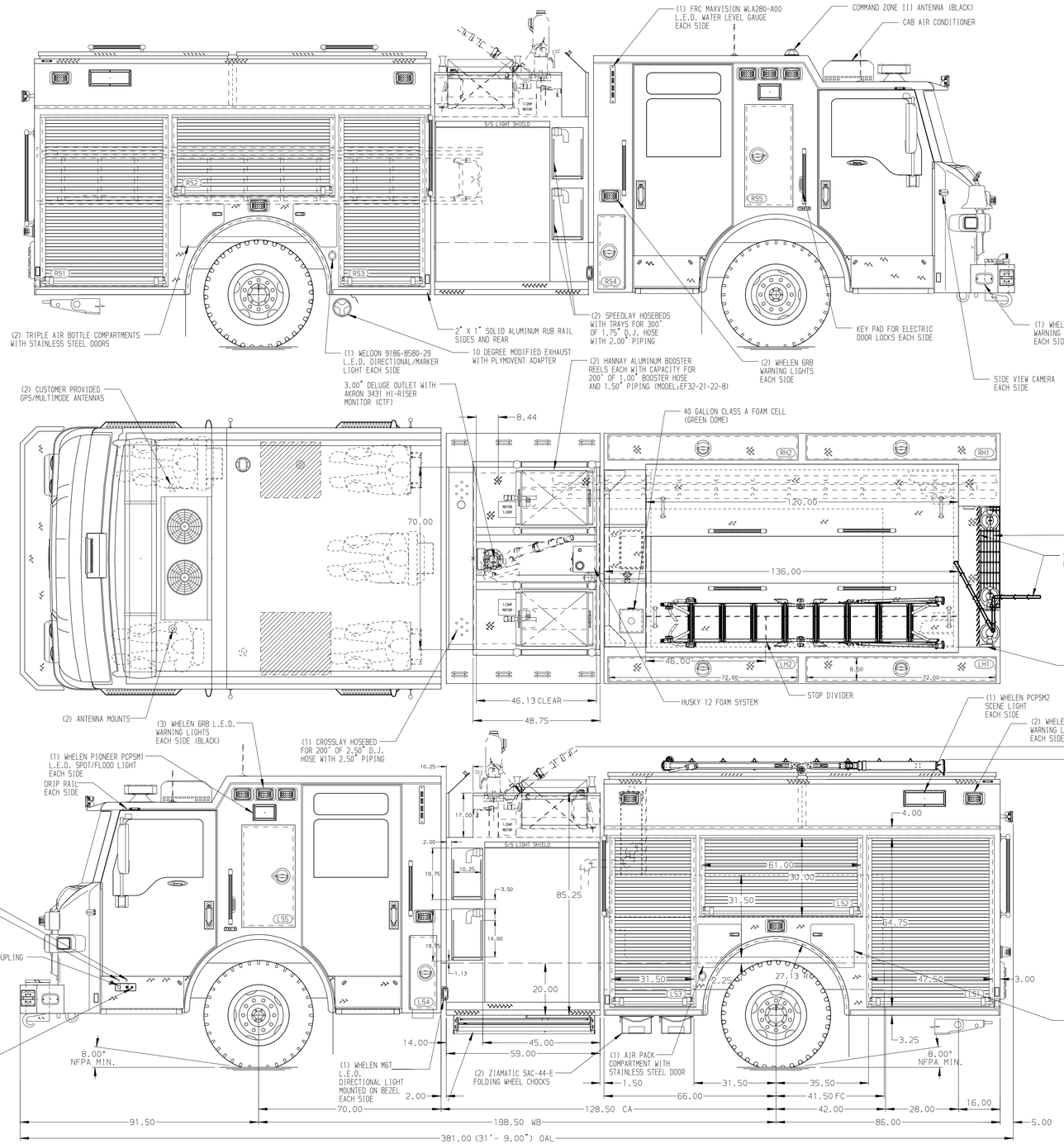

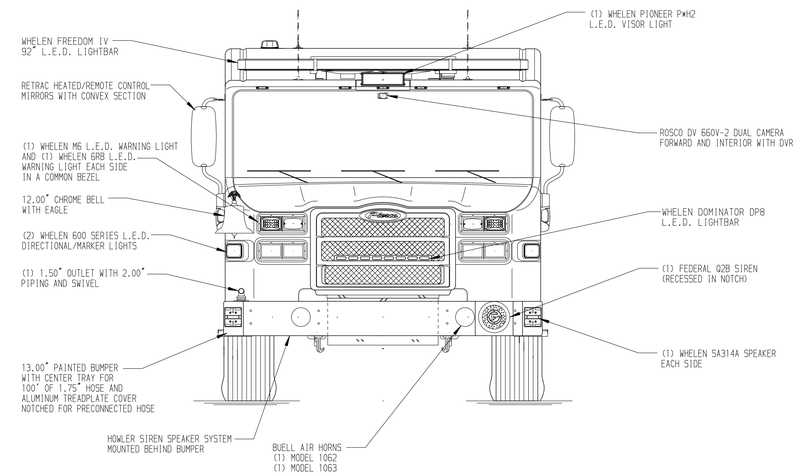

HOSEBED CAPACITIES

1. 650' OF 3.00" D.J. POLY HOSE
2. 300' OF 2.50" D.J. POLY HOSE
3. 1000' OF 5.00" D.J. POLY HOSE

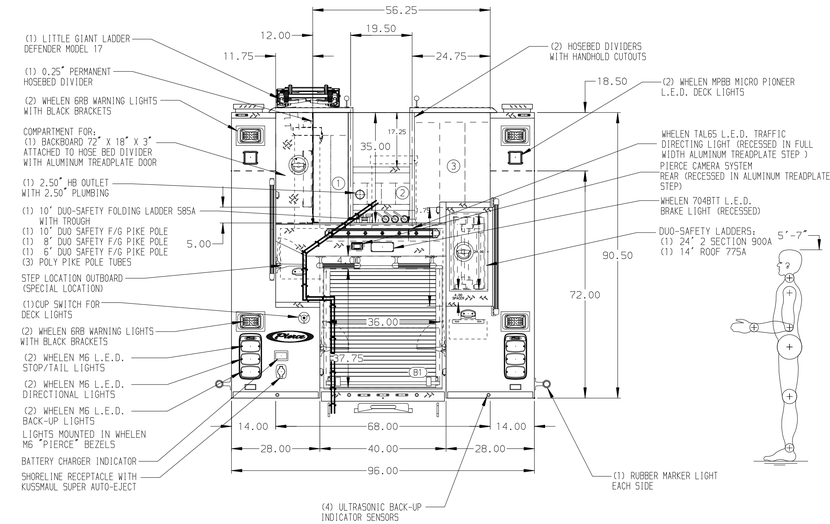

ALUMINUM BODY

NOTE

DIMENSIONS SHOWN ARE APPROXIMATE AND ARE SUBJECT TO MINOR DEVIATIONS AS MAY OCCUR OR BE NECESSARY IN CONSTRUCTION.
MINOR DETAILS NOT SHOWN.

1. PAC TRAC IN CAB PER SHOP ORDER
2. BATTERY CHARGER LOCATED BEHIND DRIVER'S SEAT ON TOP OF EMS COMPARTMENT
3. DUAL L.E.D. LIGHT STRIPS LOCATED BELOW HOSE BED COVER
4. L.E.D. LIGHT STRIP LOCATED IN WALKWAY
5. L.E.D. LIGHT STRIP LOCATED IN CARGO AREA
6. L.E.D. LIGHT STRIP LOCATED IN HATCH COMPARTMENTS

REV	DATE	BY	CH
V	17JAN24	LST	SMA
V	08JAN24	LST	SMA
V	09NOV23	LST	SMA
V	14SEP23	LME	SMA

CHASSIS DATA
MAKE: PIERCE
MODEL: VELOCITY FR

TITLE: 1500-D-540P, 500G WATER W/40G FOAM,152" BODY, FDLER (1) CROSSLAY,(2) SPEEDLAYS, LADDERS STWN TANK & SS

FOR: TULSA FIRE DEPARTMENT, TULSA, OKLAHOMA

DWG NO.: 38245AD-SH1

Pierce MANUFACTURING INC.

JOB NO.	38245 01-08
SCALE	1:24
DATE	
DRAWN BY	LME 31AUG23
CHECKED BY	SMA 05SEP23
SHEET SIZE	D
SHEET NO.	1 OF 2

View File Created 17-JAN-2024 14:26:11