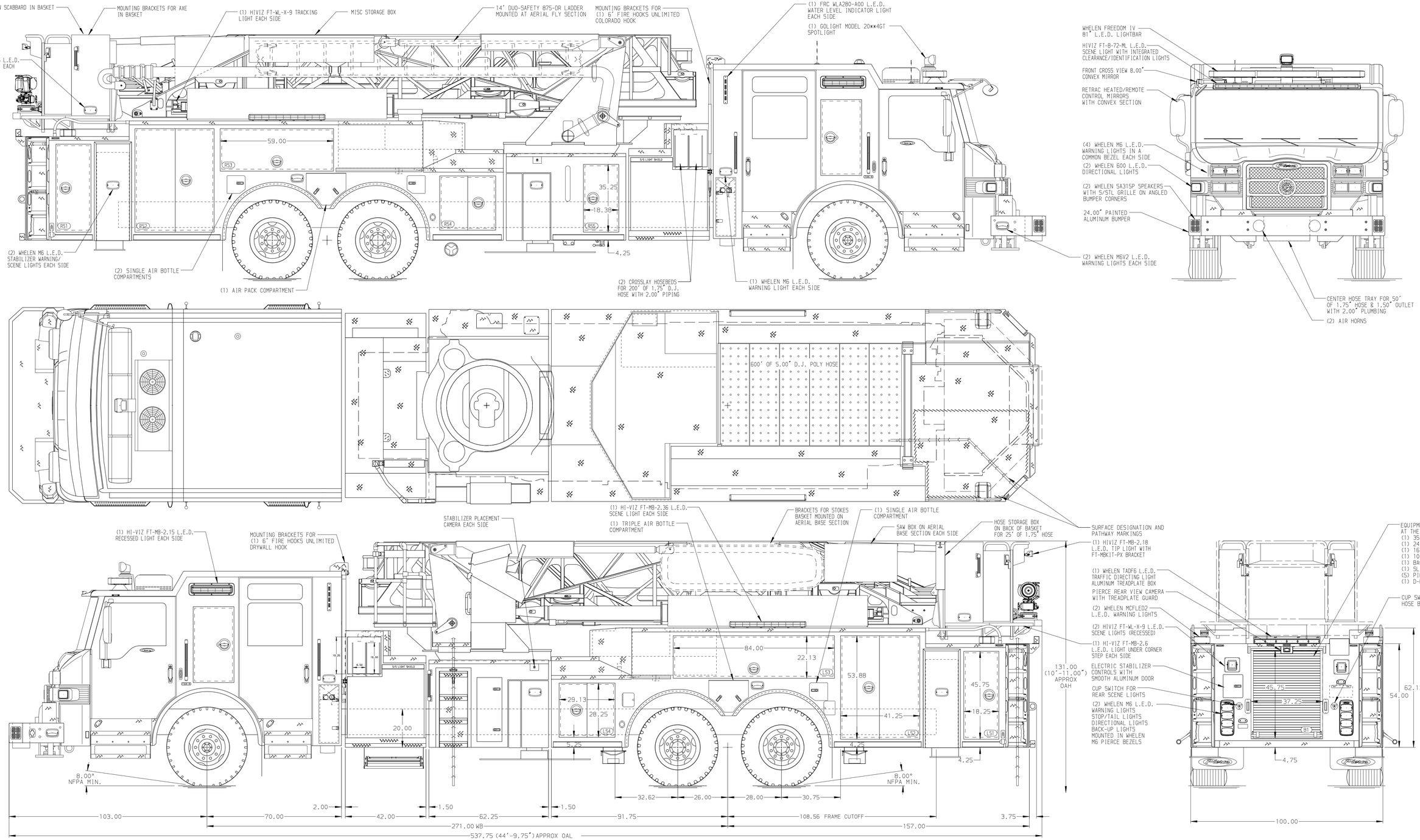

ALUMINUM BODY

SIDE ROLL AND FRONTAL IMPACT PROTECTION

NOTE

DIMENSIONS SHOWN ARE APPROXIMATE AND ARE SUBJECT TO MINOR DEVIATIONS AS MAY OCCUR OR BE NECESSARY IN CONSTRUCTION.
MINOR DETAILS NOT SHOWN.

1. SHORELINE RECEPTACLE WITH TWIST LOCK LOCATED ON DRIVER SIDE BUMPER EXTENSION
2.
3. BATTERY CHARGER LOCATED IN COMPARTMENT PER ORDER
4. BATTERY CHARGE INDICATOR LOCATED NEAR DRIVER SEAT RISER WITH BRACKET
5. THREE ADJUSTABLE SHELVES LOCATED IN COMPARTMENTS PER ORDER
6. ONE SWING-OUT TOOL GRID SYSTEM LOCATED IN COMPARTMENT PER ORDER
7. THREE FLOOR MOUTNED SLIDE-OUT TRAYS LOCATED IN COMPARTMENTS PER ORDER
8. ONE CTECH THREE-DRAWER ASSEMBLY LOCATED IN COMPARTMENT PER ORDER
9. TWO PEGBOARDS MOUNTED ON COMPARTMENT BACK WALLS PER ORDER
10. TWO PEGBOARDS MOUNTED ON COMPARTMENT SIDE WALLS PER ORDER
11. ONE TOOLBOARD ADDED TO SLIDE-OUT TRAY LOCATED PER ORDER
12. ONE AIR PACK RACK LOCATED IN COMPARTMENT PER ORDER
13. NON-RAISED AERIAL PEDESTAL
14. TECNIQ RUNG LIGHTING AT AERIAL DEVICE
15. DC POWER TO AERIAL TIP
16. FIRE RESEARCH 3-WAY INTERCOM
17. 3-in-1 LWFECOMBO BRACKETS AT AERIAL BASKET
18. WIRELESS CAMERA SYSTEM LOCATED AT AERIAL PLATFORM

REV	DATE	BY	CH
V	17JAN24	ANZ	GKH
V	08JAN24	ANZ	GKH
V	300CT23	ANZ	GKH
V	18JAN23	ANZ	BYO

CHASSIS DATA
MAKE: PIERCE
MODEL: VELOCITY

Pierce MANUFACTURING INC.

TITLE: 100' ASCENDANT AERIAL TOWER AND BODY ASSEMBLY
300 GALLON WATER TANK

FOR: PASCUA PUEBLO FIRE DEPARTMENT
TUCSON, AZ

DWG NO.: 38289AD

JOB NO.	38289
SCALE	1:24
DATE	
DRAWN BY	ANZ 03JAN23
CHECKED BY	BYO 05JAN23
SHEET SIZE	D
SHEET NO.	1 OF 1

View File Created 26-JAN-2024 13:44:35