Pumper, PUC

BODY
Pumper, PUC, Aluminum

CHASSIS
Velocity Chassis, PUC (Medium Block)

CHASSIS

AXLE,FRONT,CUSTOM
19,500 lb TAK-4 Axle

AXLE,REAR
27,000 lb Meritor Axle

ENGINE
450 HP Cummins L9 Engine

TRANSMISSION
Allison 5th Gen, 3000 EVS P

BUMPER
19" Extended Painted Steel

CAB
7010 Velocity FR Cab, PUC

BODY

WATER TANK
750 Gallon Poly Water Tank

COMPT,PUMPER,REAR
44.50" FF Rollup Rear Compt w/Tailboard, PUC

COMPT,PUMPER,LEFT SIDE
189" Rollup Full Height & Depth Front & Rear, PUC

COMPT,PUMPER,RIGHT SIDE
189" Rollup Full Height & Depth Front & Rear, PUC

FIRE SUPPRESSION

PUMPHOUSE
Control Zone, PUC

PUMP
1500 GPM Pierce PUC

CROSSLAYS,1.50"
(2) 1.50", Poly Trays, 200'
(2) Deadlays, Poly Trays, 200'(Upper)

CROSSLAYS,2.50"
Not Required

GENERATOR
Generator Not Required

Foam System
Husky 3 Single Agent Foam System

Foam Cell
20 Gallon Foam Cell, Not Reduced Water, PUC

Side Roll and Frontal Impact Protection

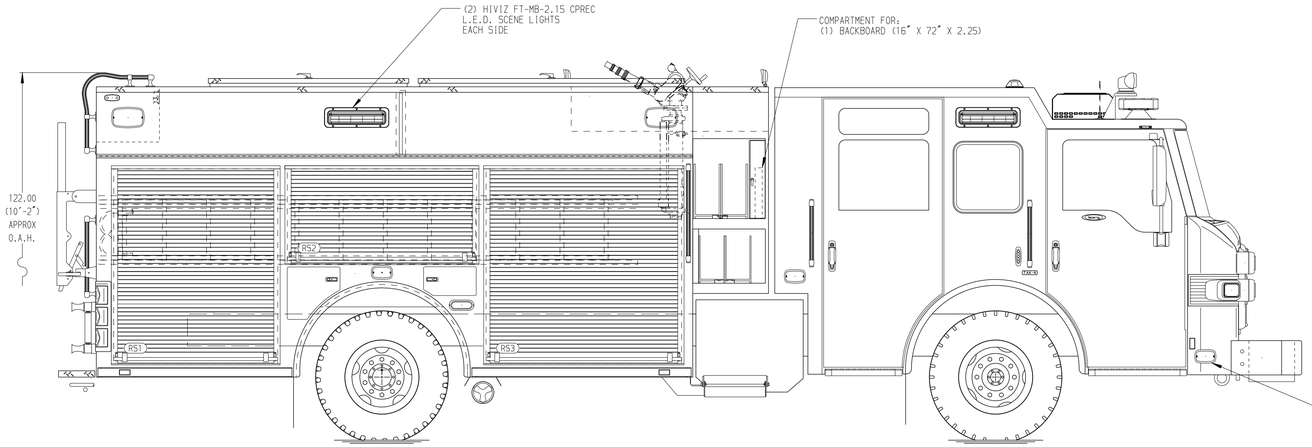

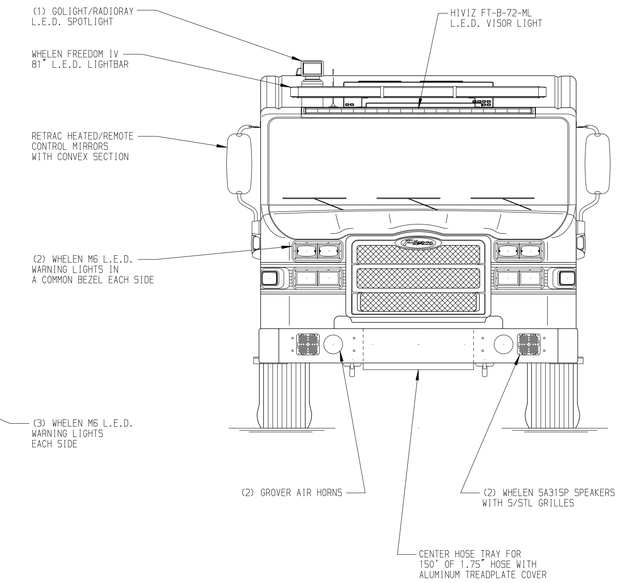

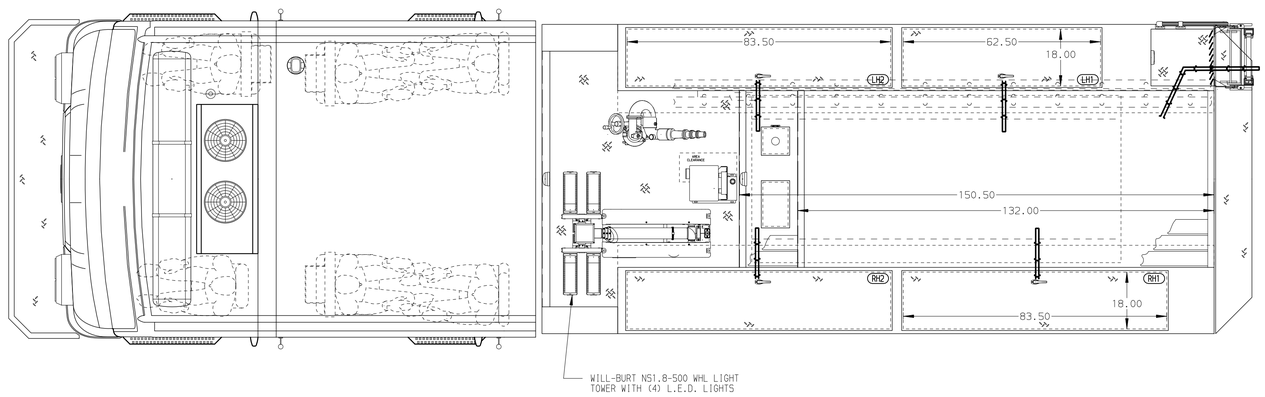

HOSEBED CAPACITY

BED 1
450' OF 2.50" D.J. POLY HOSE

BED 2
950' OF 5.00" D.J. POLY HOSE

BED 3
450' OF 2.50" D.J. POLY HOSE

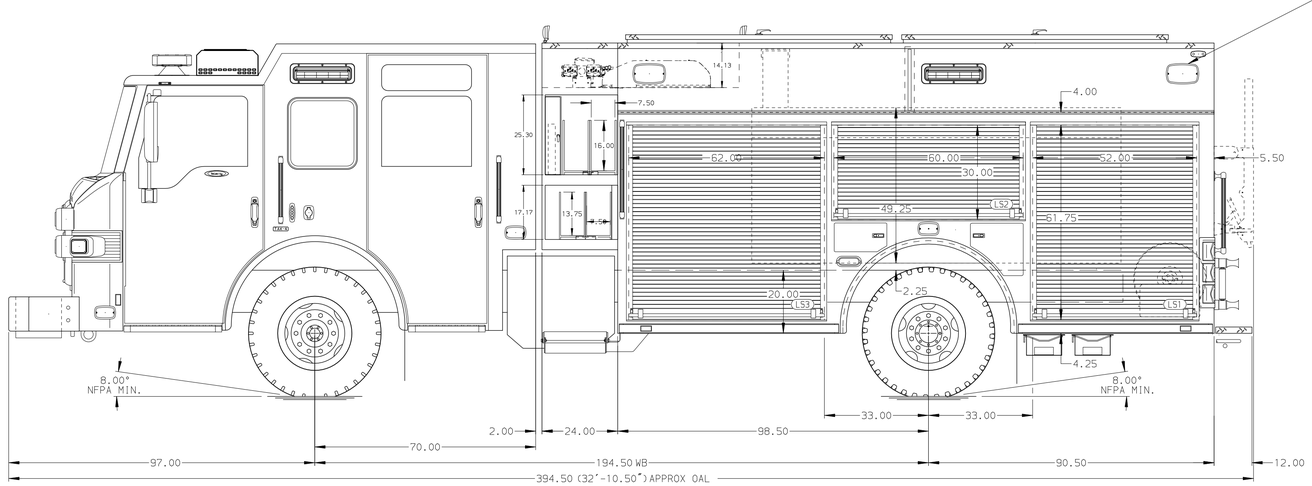

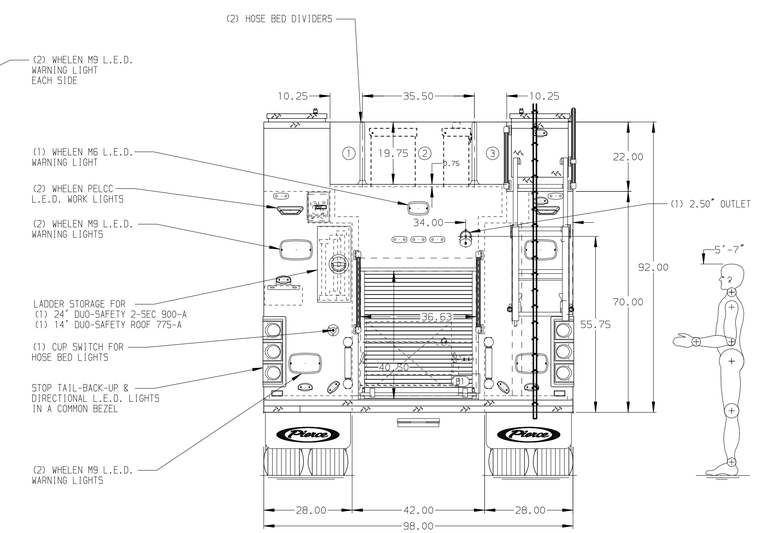

NOTE

DIMENSIONS SHOWN ARE APPROXIMATE AND ARE SUBJECT TO MINOR DEVIATIONS AS MAY OCCUR OR BE NECESSARY IN CONSTRUCTION.
MINOR DETAILS NOT SHOWN.

1. ONE 1.50 OUTLET WITH 2.00 PIPING AND SWIVEL LOCATED IN CENTER BUMPER TRAY
2. SHORELINE RECEPTACLE WITH KUSSMAUL SUPER AUTO-EJECT LOCATED ON DRIVER SIDE OF THE CAB
3. BATTERY CHARGER LOCATED IN COMPARTMENT PER SHOP ORDER
4. BATTERY CHARGE INDICATOR LOCATED NEAR DRIVER SEAT RISER WITH BRACKET
5. EIGHT ADJUSTABLE SHELVES LOCATED PER SHOP ORDER
6. TWO FLOOR MOUNTED SLIDE-OUT TRAYS LOCATED PER SHOP ORDER
7. CTECH THREE DRAWER ASSEMBLY LOCATED PER SHOP ORDER
8. ONE SLIDE-OUT TRAY LOCATED PER SHOP ORDER
9. TWO TILT/SLIDE-OUT TRAY LOCATED PER SHOP ORDER
10. ONE SWING-OUT TOOLBOARD LOCATED PER SHOP ORDER
11. HANNAY BOOSTER REEL MODEL SBEF34-23-24 WITH CAPACITY FOR 200' OF 1.00" NIEDNER HOSE LOCATED IN B1

REV	DATE	BY	CH
▽	-	-	-

CHASSIS DATA
MAKE: PIERCE
MODEL: VELOCITY

CUSTOMER APPROVAL
APPROVED BY: _____
DATE: _____

Pierce MANUFACTURING INC.

TITLE: Pierce PUC Pumper Approval Drawing
FOR: Pascua Pueblo Fire Department
DWG NO.: 38290AD

JOB NO.	38290
SCALE	1:24
DATE	
DRAWN BY	MMF 06FEB23
CHECKED BY	COL 06FEB23
SHEET SIZE	D
SHEET NO.	1 OF 1

View File Created 06-FEB-2023 09:24:09