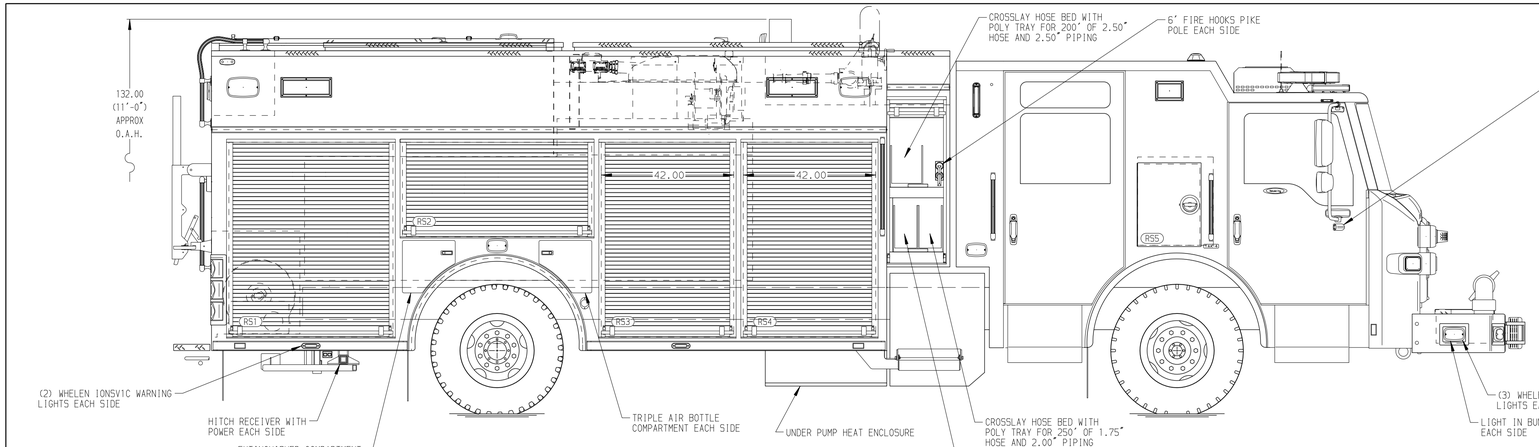

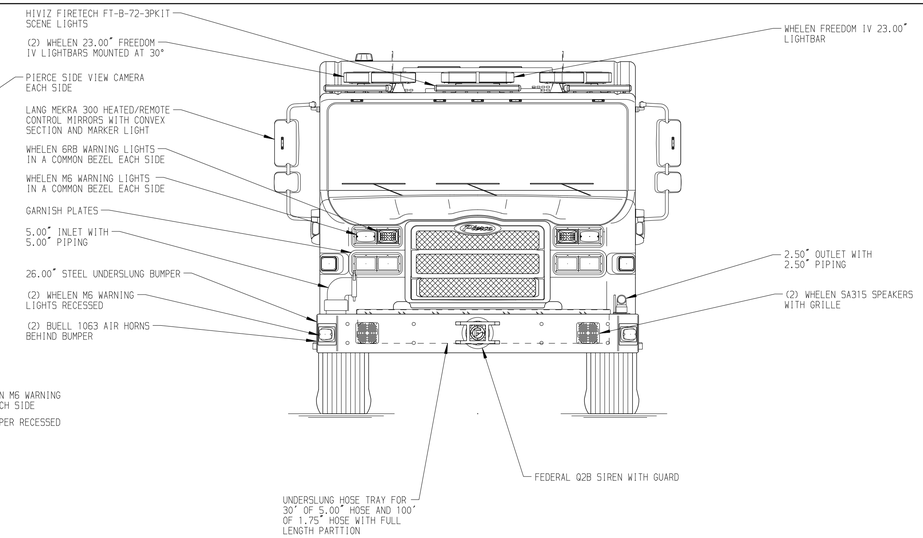

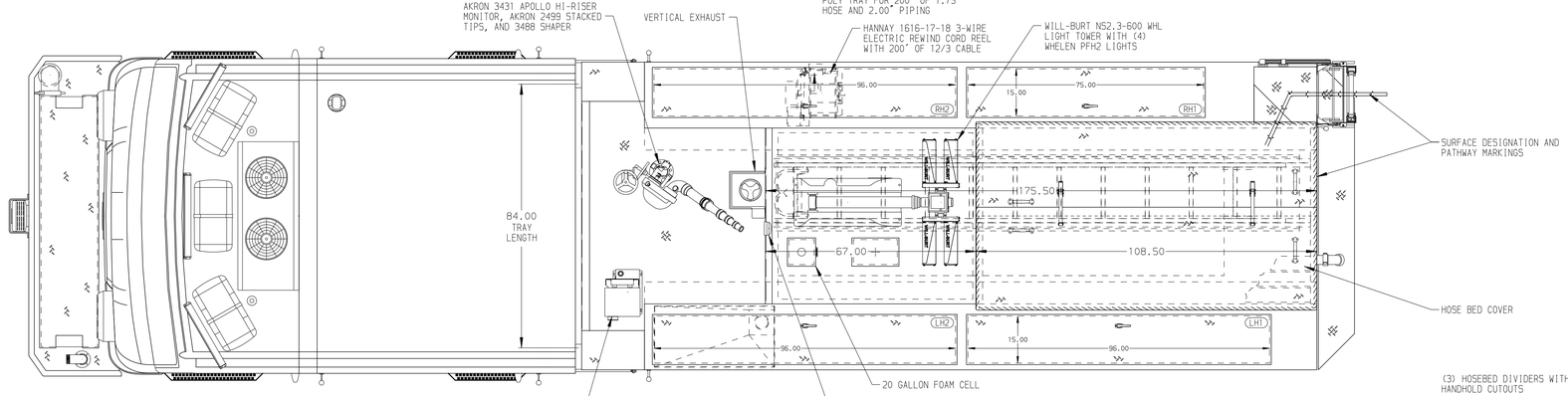

HOSEBED CAPACITIES

1. 400' OF 2.50" D.J. POLY HOSE
2. 500' OF 1.75" D.J. POLY HOSE
3. 1000' OF 5.00" D.J. POLY HOSE
4. 300' OF 3.00" D.J. POLY HOSE

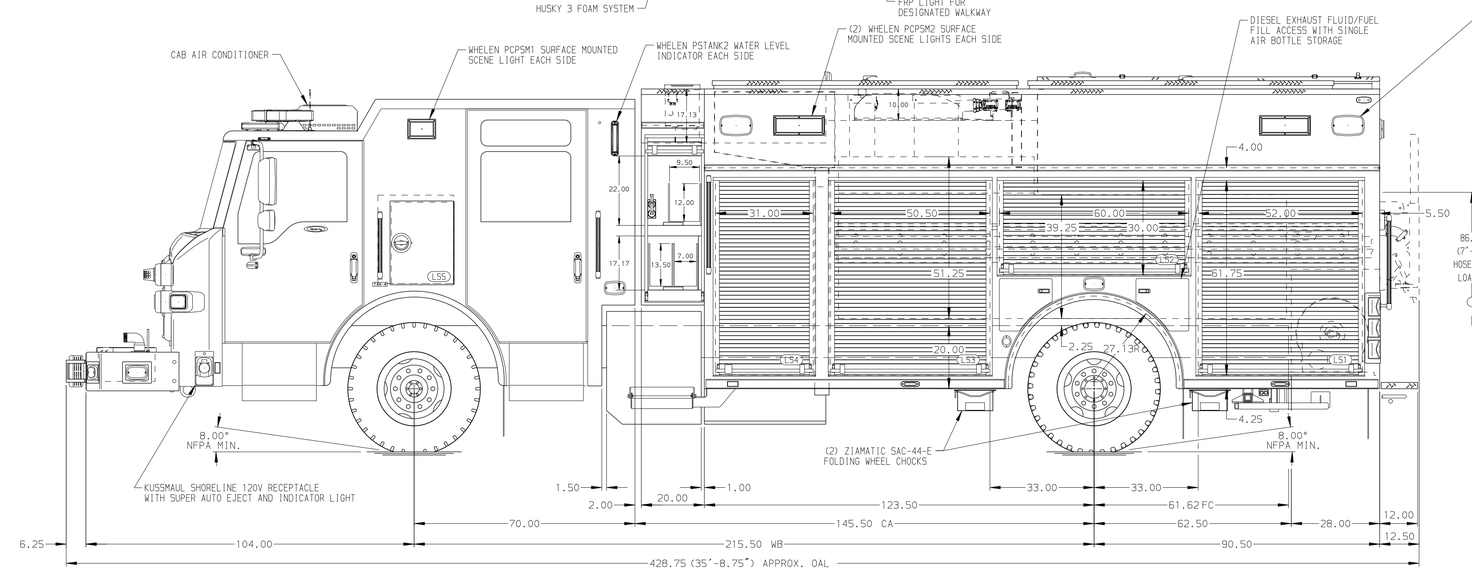

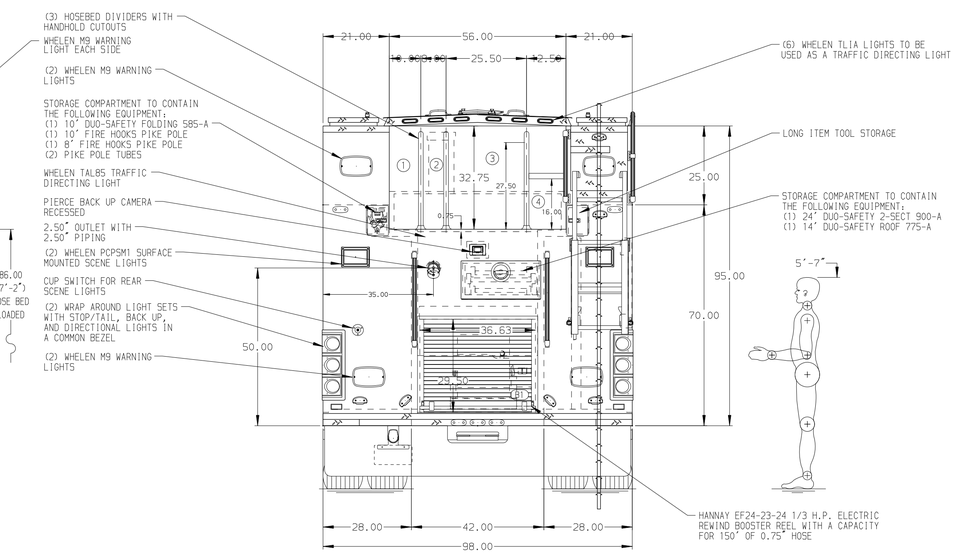

ALUMINUM BODY | SIDE ROLL AND FRONTAL IMPACT PROTECTION

NOTE

DIMENSIONS SHOWN ARE APPROXIMATE AND ARE SUBJECT TO MINOR DEVIATIONS AS MAY OCCUR OR BE NECESSARY IN CONSTRUCTION.
MINOR DETAILS NOT SHOWN.

1. ONSPOT TIRE CHAINS PROVIDED AT THE REAR
2. AIR OUTLET WITH SHUT OFF VALVE LOCATED PER ORDER
3. BATTERY CHARGER/COMPRESSOR LOCATED PER ORDER
4. BATTERY CHARGER INDICATOR LOCATED PER ORDER
5. SUB-FEED CIRCUIT BREAKER PANEL LOCATED PER ORDER
6. JUMPER STUDS LOCATED PER ORDER
7. TWO VERTICAL PARTITIONS LOCATED PER ORDER
8. NORCOLD DE105 REFRIGERATOR LOCATED PER ORDER
9. CIRCUIT BREAKER PANEL LOCATED PER ORDER
10. TWO 120V DUPLEX RECEPTACLES LOCATED IN CAB PER ORDER
11. ELEVEN 120V DUPLEX RECEPTACLES IN REAR BODY COMPARTMENT LOCATED PER ORDER
12. OIL DRY HOPPER WITH 150 LBS. OF OIL DRY ABSORBENT LOCATED PER ORDER

REV	DATE	BY	CH
V	02FEB24	BST	NPE
V	04DEC23	BST	NPE
V	01SEP23	BST	NPE

CHASSIS DATA
MAKE: PIERCE
MODEL: VELOCITY

Pierce MANUFACTURING INC.

TITLE: 1500-D-770P,750 GAL WATER W/20 GAL FOAM CELL 214" PUC RESCUE BODY,LADDER THRU TANK,DELUGE
FOR: CREVE COEUR FIRE PROTECTION DISTRICT CREVE COEUR,MISSOURI
DWG NO.: 38294AD

JOB NO.	38294
SCALE	1:24
DATE	
DRAWN BY	BST 10JUL23
CHECKED BY	NPE 22AUG23
SHEET SIZE	D
SHEET NO.	1 OF 1

View File Created 06-FEB-2024 10:09:03