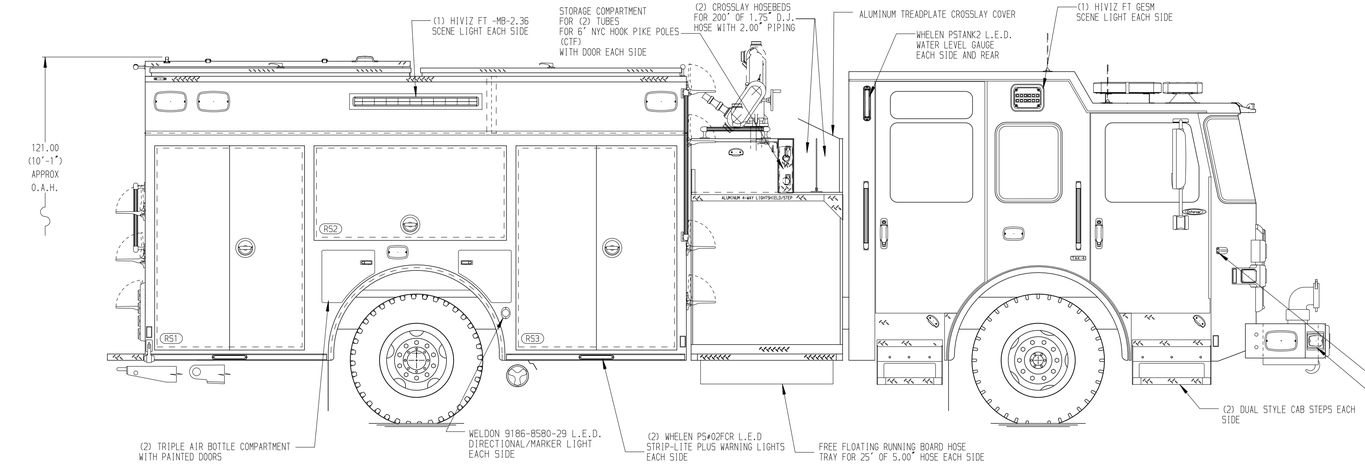

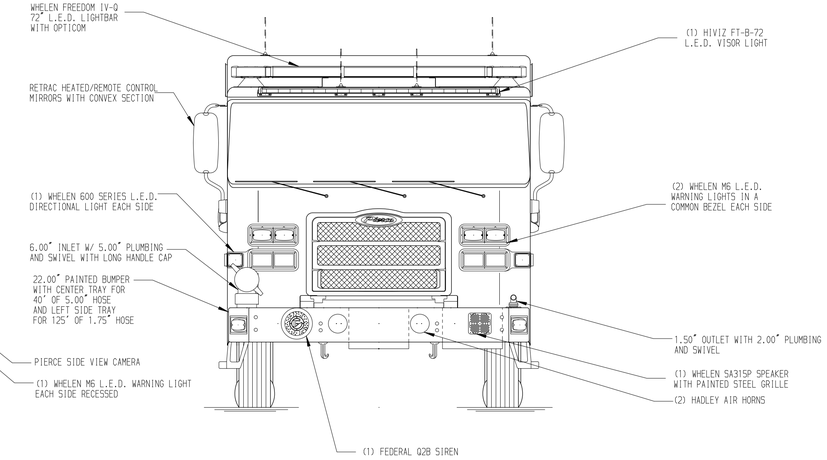

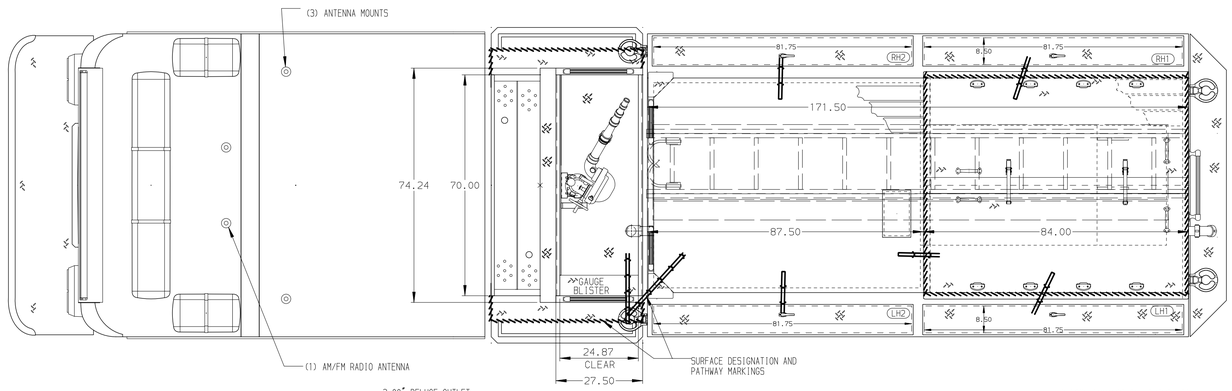

HOSEBED CAPACITIES

(1) - 1000' OF 5.00" HOSE
(2) - 1000' OF 3.00" HOSE

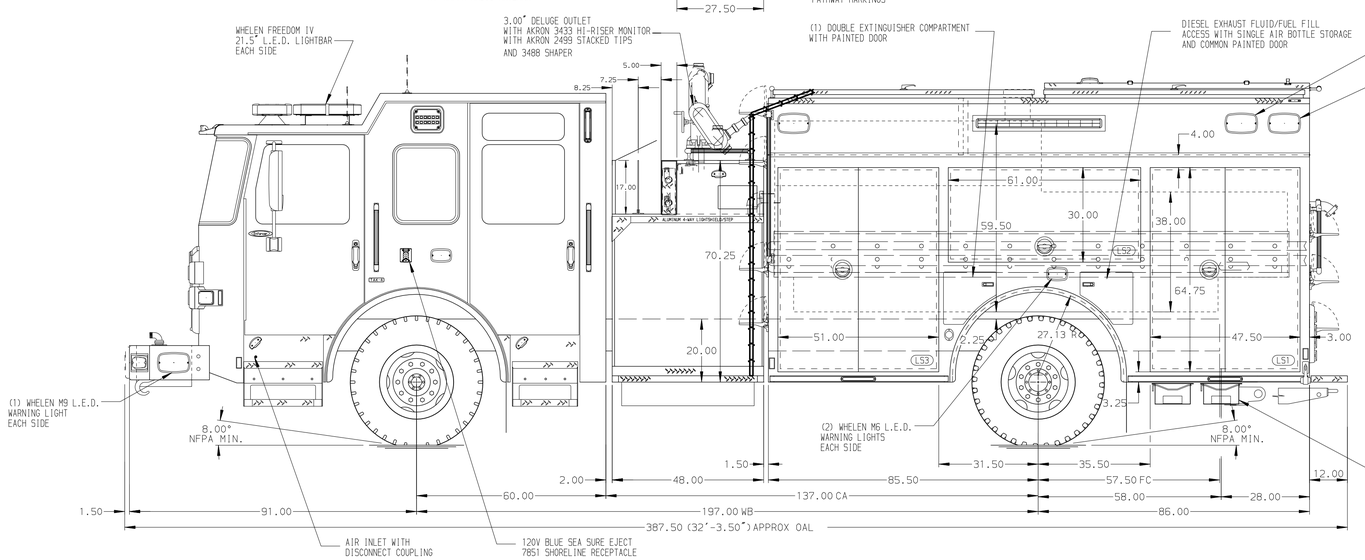

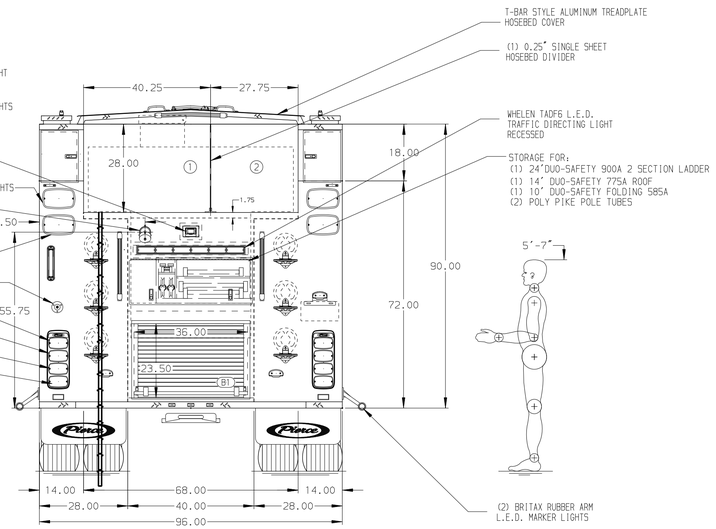

ALUMINUM BODY

MAXIMUM O.A.L. 387.50"

MAXIMUM O.A.H. 121"

NOTE

DIMENSIONS SHOWN ARE APPROXIMATE AND ARE SUBJECT TO MINOR DEVIATIONS AS MAY OCCUR OR BE NECESSARY IN CONSTRUCTION.
MINOR DETAILS NOT SHOWN.

1. BATTERY CHARGER LOCATED IN THE CAB PER SHOP ORDER
2. SIX ADJUSTABLE FULL WIDTH/DEPTH SHELVES LOCATED PER SHOP ORDER
3. ONE FLOOR MOUNTED SLIDE-OUT TRAY WITH SIDE SLIDES LOCATED PER SHOP ORDER
4. ONE SWING-OUT ALUMINUM TOOLBOARD WITH PAC TRAC LOCATED PER SHOP ORDER
5. SIX PEGBOARDS MOUNTED ON THE BACKWALL PER SHOP ORDER
6. THREE 120V NEMA DUPLEX RECEPTACLES LOCATED IN THE CAB PER SHOP ORDER
7. TWO 120V NEMA DUPLEX RECEPTACLES LOCATED IN THE BODY PER SHOP ORDER

REV	DATE	BY	CH
3	24JUL23	LST	CLM
2	02JUN23	LST	CLM
1	06APR23	BST	EGO

CHASSIS DATA
MAKE: PIERCE
MODEL: ENFORCER

Pierce MANUFACTURING INC.

TITLE: 1250-D-1000P, 171" PUMPER BODY, (2)CROSSLAYS, DELUGE LADDER TUNNEL THROUGH TANK, HATCHES

FOR: DWIGHT FIRE PROTECTION DISTRICT
DWIGHT, ILLINOIS

DWG NO.: 38296AD

JOB NO.	38296
SCALE 1:24	DATE
DRAWN BY LST	23MAR23
CHECKED BY EGO	31MAR23
SHEET SIZE D	SHEET NO. 1 OF 1

View File Created 08-AUG-2023 11:53:09