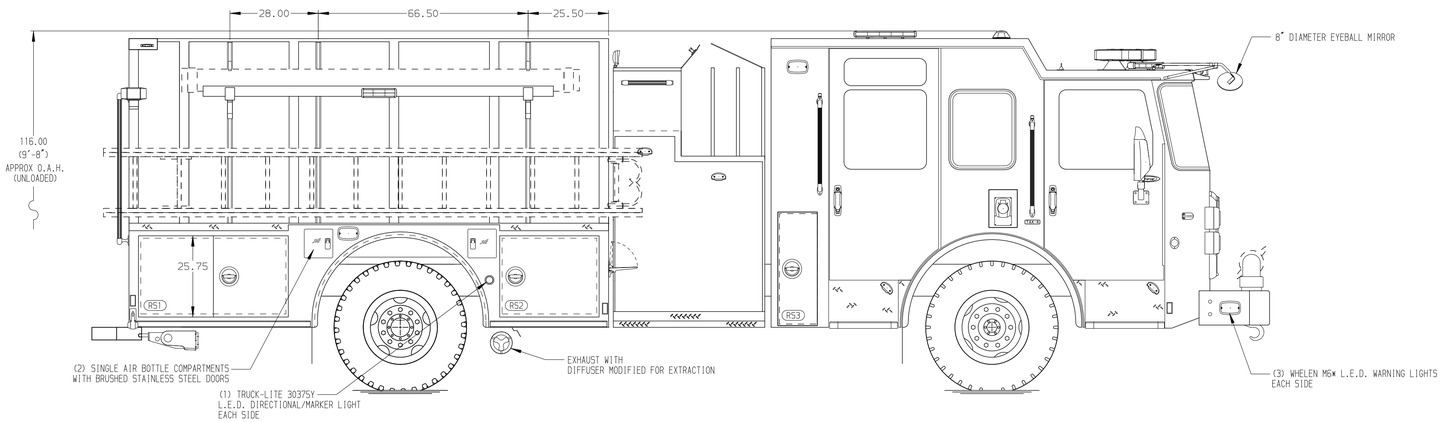

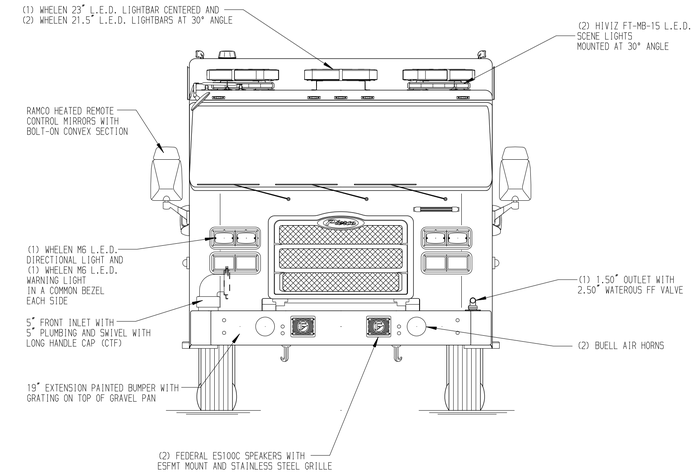

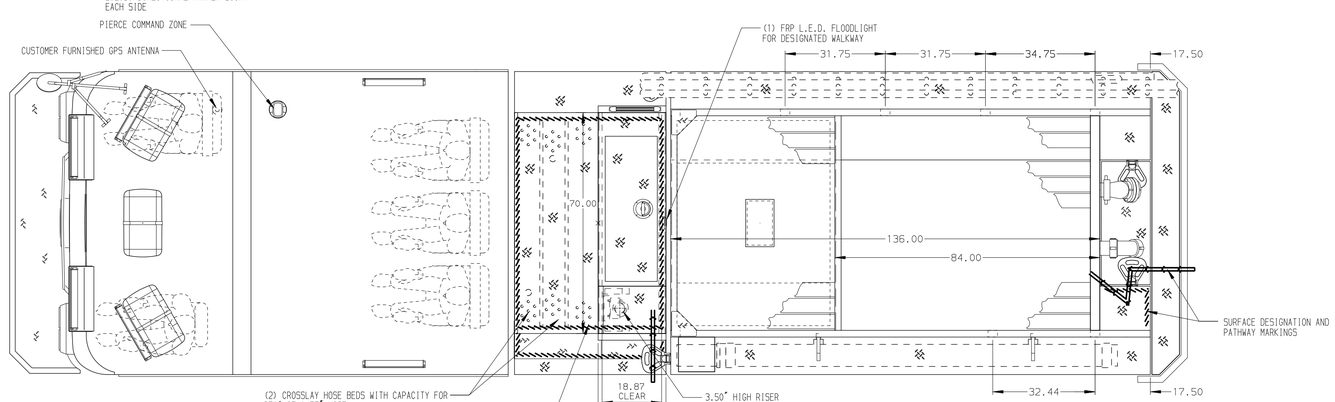

HOSEBED CAPACITIES

1. - TRAY 15" INSIDE WIDTH X 15" INSIDE HEIGHT
2. - 500' OF 1.75" DJP HOSE
3. - 700' OF 3.00" DJP HOSE
4. - 700' OF 4.00" DJP HOSE
5. - 500' OF 2.50" DJP HOSE W/100' BUNDLE OF 1.75" DJP HOSE

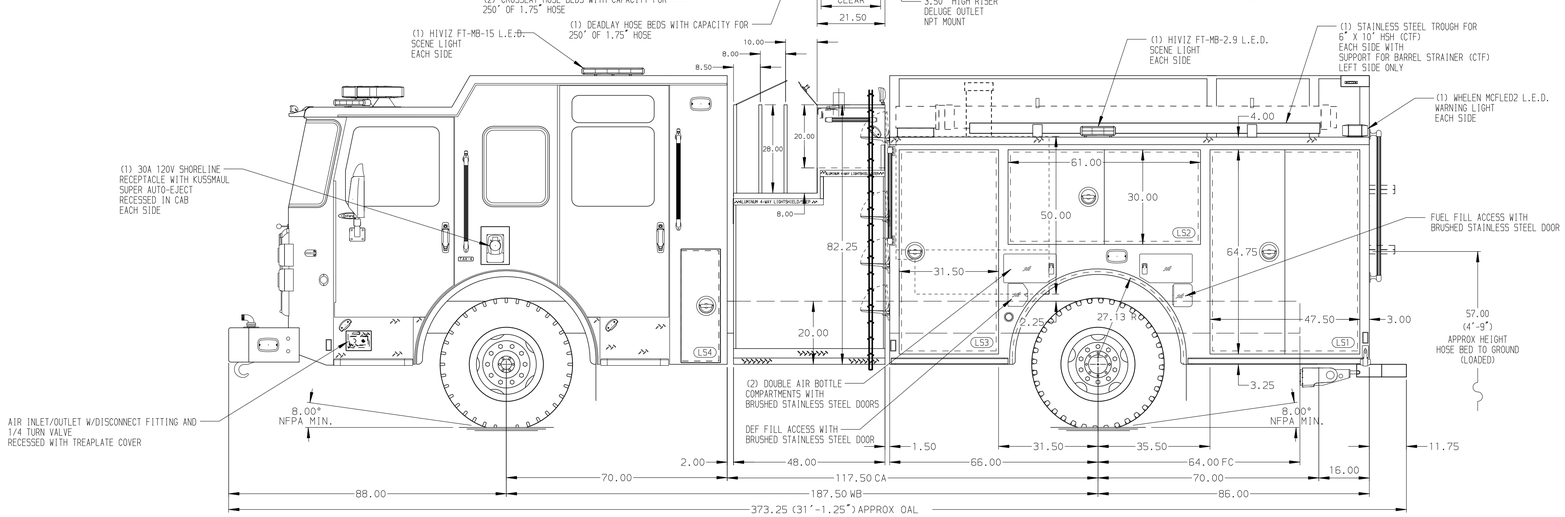

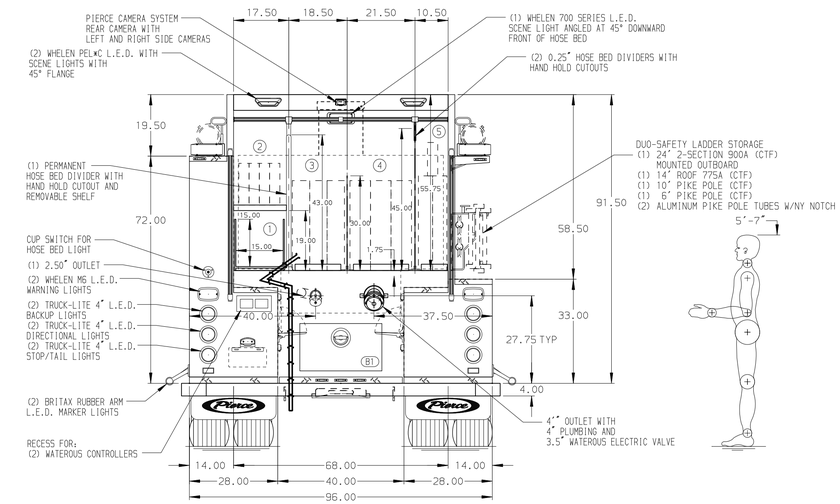

STAINLESS STEEL BODY

NOTE

DIMENSIONS SHOWN ARE APPROXIMATE AND ARE SUBJECT TO MINOR DEVIATIONS AS MAY OCCUR OR BE NECESSARY IN CONSTRUCTION.
MINOR DETAILS NOT SHOWN.

1. AIR COMPRESSOR LOCATED BEHIND THE DRIVER'S SEAT
2. FRONT AND REAR SUSPENSION LUBRICATION SYSTEM
3. BATTERY CHARGE INDICATOR LOCATED ON DRIVER'S SEAT RISER

REV	DATE	BY	CH
V	02JAN24	SAM	JBL
B	14NOV23	SAM	JBL
V	20SEP23	SAM	JBL

CHASSIS DATA
MAKE: PIERCE
MODEL: ENFORCER

Pierce MANUFACTURING INC.

TITLE: 1500-D-500P, 500G WATER, 152"BODY W/SPECIAL LOW SIDE (2) CROSSLAYS, (1) DEADLAY, LADDER BRACKETS RS
FOR: MILWAUKEE FIRE DEPARTMENT MILWAUKEE, WISCONSIN
DWG NO.: 38301AD-SH1

JOB NO.	38301
SCALE 1:24	DATE
DRAWN BY SAM	11SEP23
CHECKED BY JBL	12SEP23
SHEET SIZE D	SHEET NO. 1 OF 2

View File Created 03-JAN-2024 07:03:43