PUMPER

BODY
Long Aluminum 2nd Gen Pumper

CHASSIS
Impel Chassis

CHASSIS

AXLE, FRONT, CUSTOM
19,500 lb Meritor Axle

AXLE, REAR
24,000 lb Meritor Axle

ENGINE
400 HP Cummins L9 Engine

TRANSMISSION
Allison 5th Gen, 3000 EVS P

BUMPER
19" Extended Stainless Steel

CAB
7010 Impel FR Cab

BODY

WATER TANK
750 Gallon Poly Water Tank

COMPT, PUMPER, REAR
44.50" FF Rollup Rear Compt

COMPT, PUMPER, LEFT SIDE
161" Rollup Full Height Front & Rear FDLER

COMPT, PUMPER, RIGHT SIDE
161" Rollup Full Height Front & Rear FDLER

FIRE SUPPRESSION

PUMPHOUSE
48" Control Zone Top Mount

PUMP
1500 GPM Waterous CSU

CROSSLAYS, 1.50"
1.50" Crosslays Not Required

CROSSLAYS, 2.50"
2.50" Crosslay Not Required

SPEEDLAYS
(2) 1.50" W/Tray 225' OF 1.75"

GENERATOR
Generator Not Required

Foam System
Foam System Not Required

Foam Cell
Foam Cell Not Required

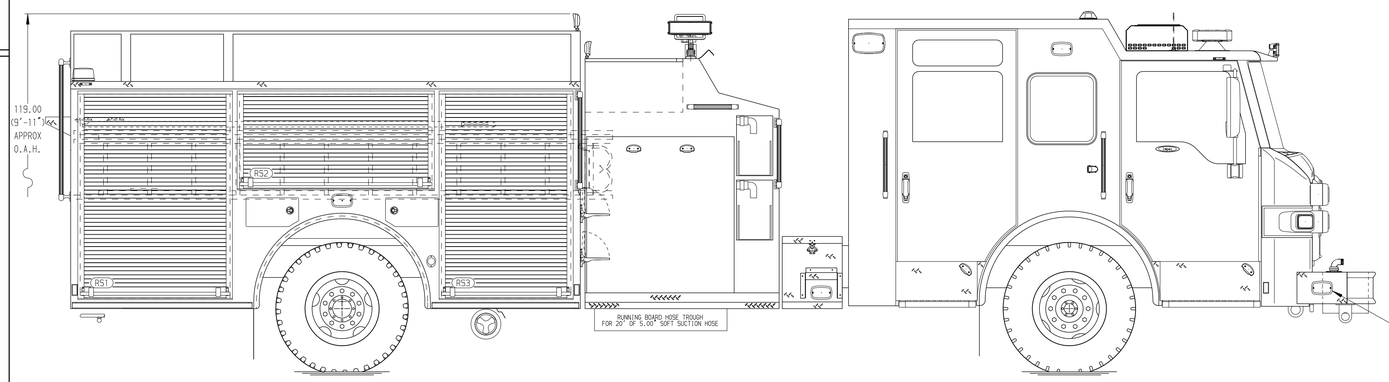

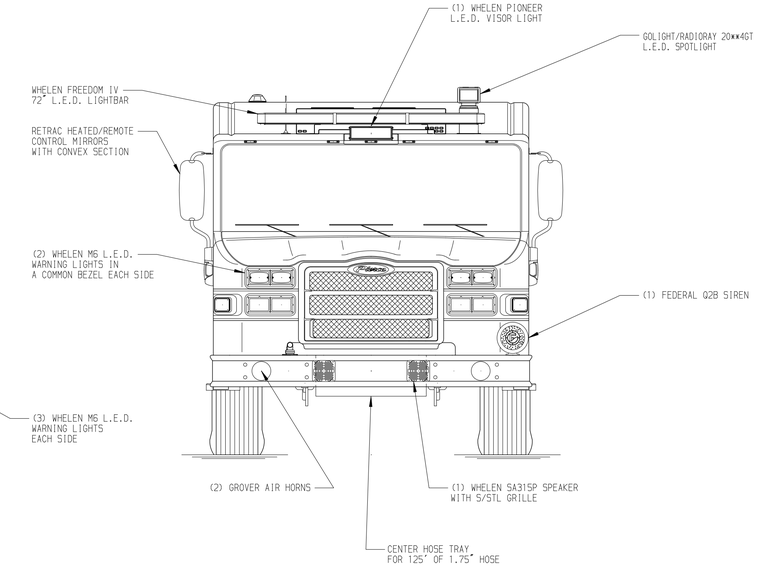

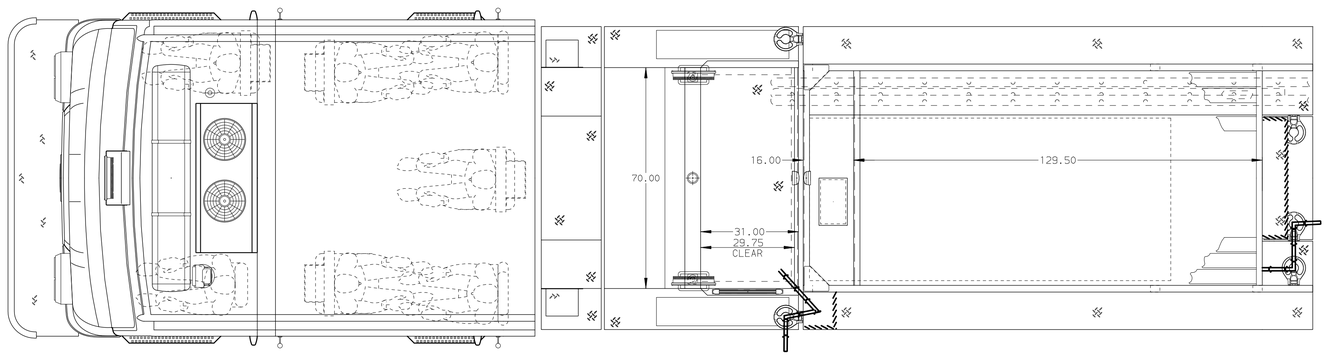

HOSEBED CAPACITY

BED 1
300' OF 3.00" D.J. POLY HOSE

BED 2
1200' OF 5.00" D.J. POLY HOSE

BED 3
200' OF 2.50" D.J. POLY HOSE

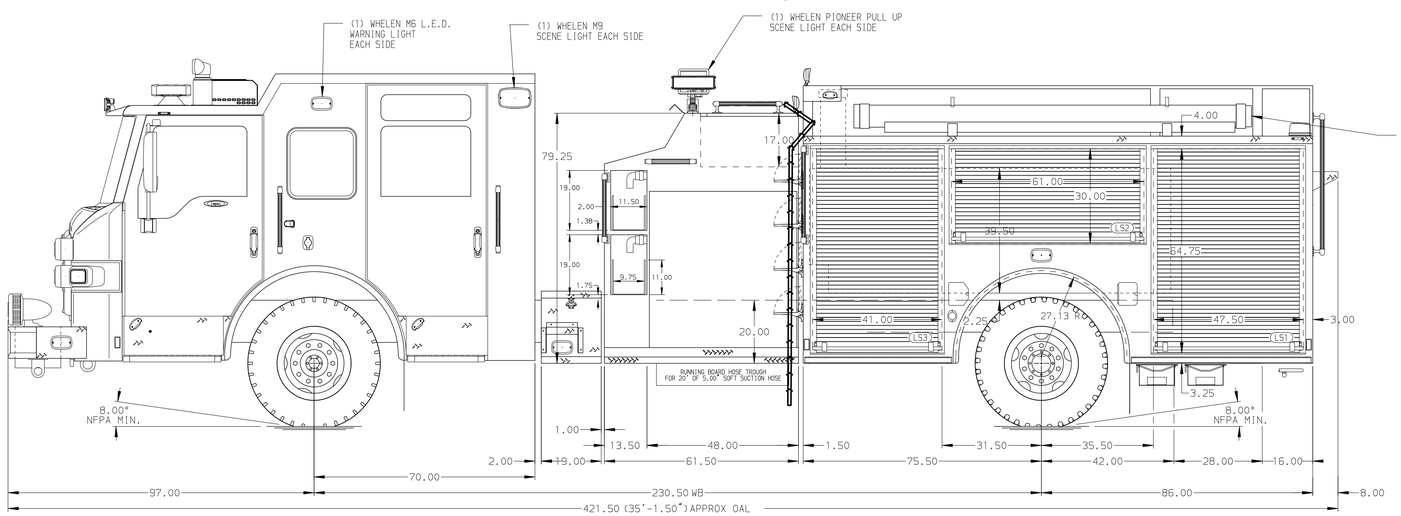

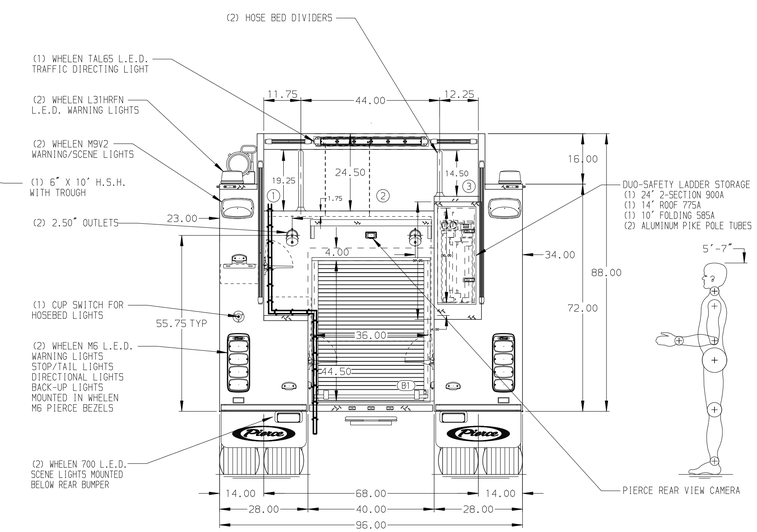

CUSTOMER APPROVAL

APPROVED BY: _____

DATE: _____

Pierce MANUFACTURING INC.

JOB NO.	38317
SCALE	1:24
DATE	
TITLE	Pierce Pumper Approval Drawing –
FOR	Palm Bay Fire Rescue –
DRAWN BY	MMF 23MAR22
CHECKED BY	COL 23MAR22
CHASSIS DATA	
MAKE	PIERCE
MODEL	IMPEL FR
DWG NO.	38317AD
SHEET SIZE	D
SHEET NO.	1 OF 1

REV	DATE	BY	CH
▽	-	-	-

NOTE

DIMENSIONS SHOWN ARE APPROXIMATE AND ARE SUBJECT TO MINOR DEVIATIONS AS MAY OCCUR OR BE NECESSARY IN CONSTRUCTION.
MINOR DETAILS NOT SHOWN.

1. ONE 1.50 OUTLET WITH 2.00 PIPING AND SWIVEL LOCATED ON TOP BUMPER RIGHT SIDE
2. SHORELINE RECEPTACLE WITH KUSSMAUL SUPER AUTO-EJECT LOCATED ON DRIVER SIDE OF THE CAB
3. AIR INLET/OUTLET WITH DISCONNECT COUPLING IN THE DRIVER SIDE PUMP PANEL
4. BATTERY CHARGER LOCATED PER ORDER
5. BATTERY CHARGE INDICATOR LOCATED NEAR DRIVER SEAT RISER WITH BRACKET
6. SEVEN ADJUSTABLE SHELVES LOCATED PER ORDER
7. ONE FLOOR MOUNTED SLIDE-OUT TRAY LOCATED PER ORDER
8. TWO SLIDE-OUT TRAY LOCATED PER SHOP ORDER
9. ONE TIL7/SLIDE-OUT TRAY LOCATED PER SHOP ORDER

View File Created 23-MAR-2022 14:39:32