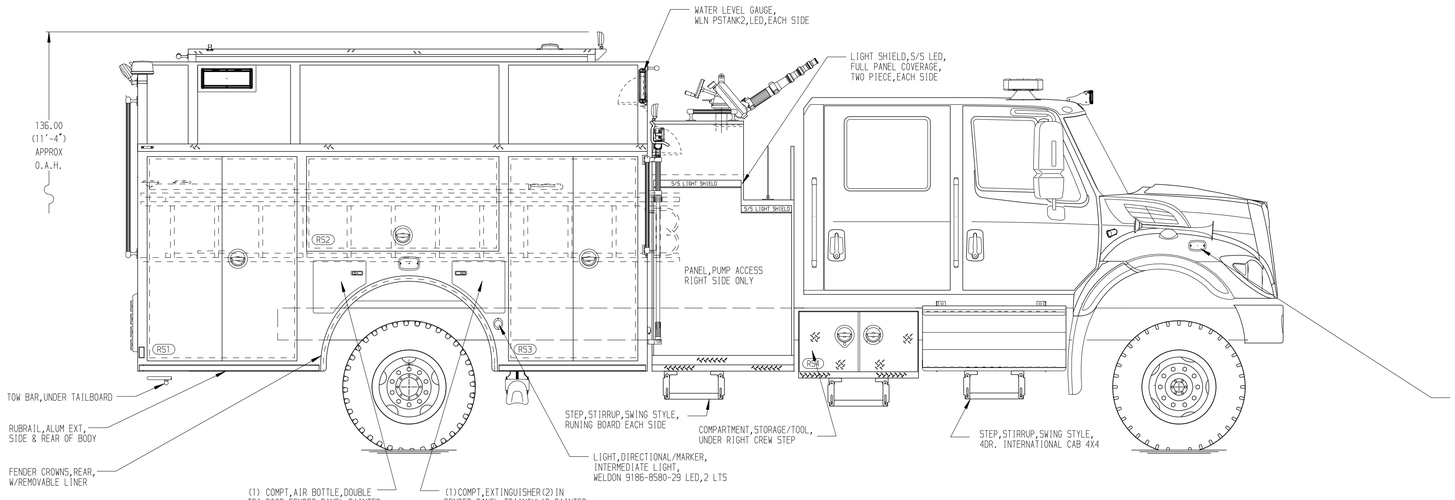

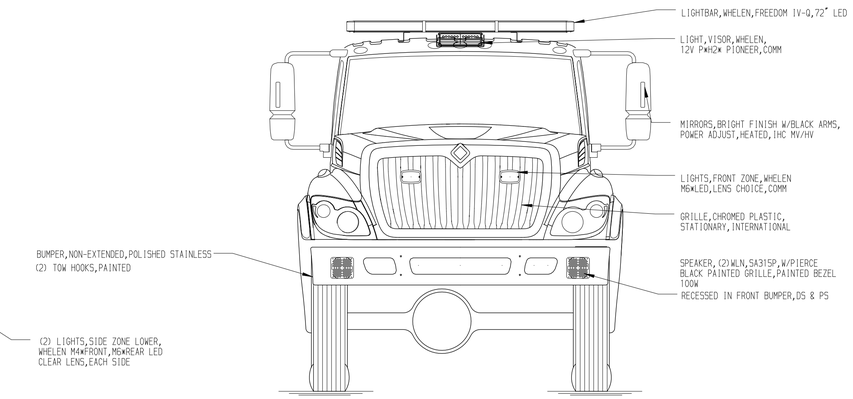

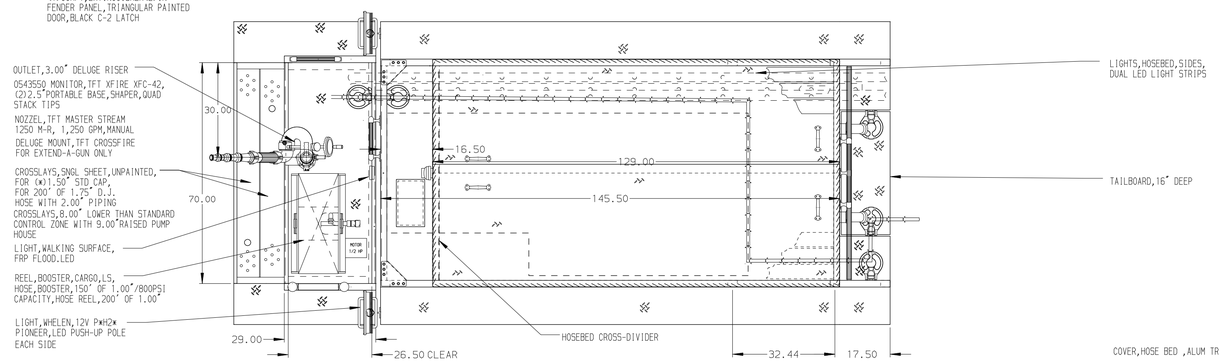

HOSEBED CAPACITIES

1. 500' OF 5.00" D.J. POLY HOSE
2. 500' OF 5.00" D.J. POLY HOSE
3. 500' OF 3.00" D.J. POLY HOSE
4. 500' OF 3.00" D.J. POLY HOSE

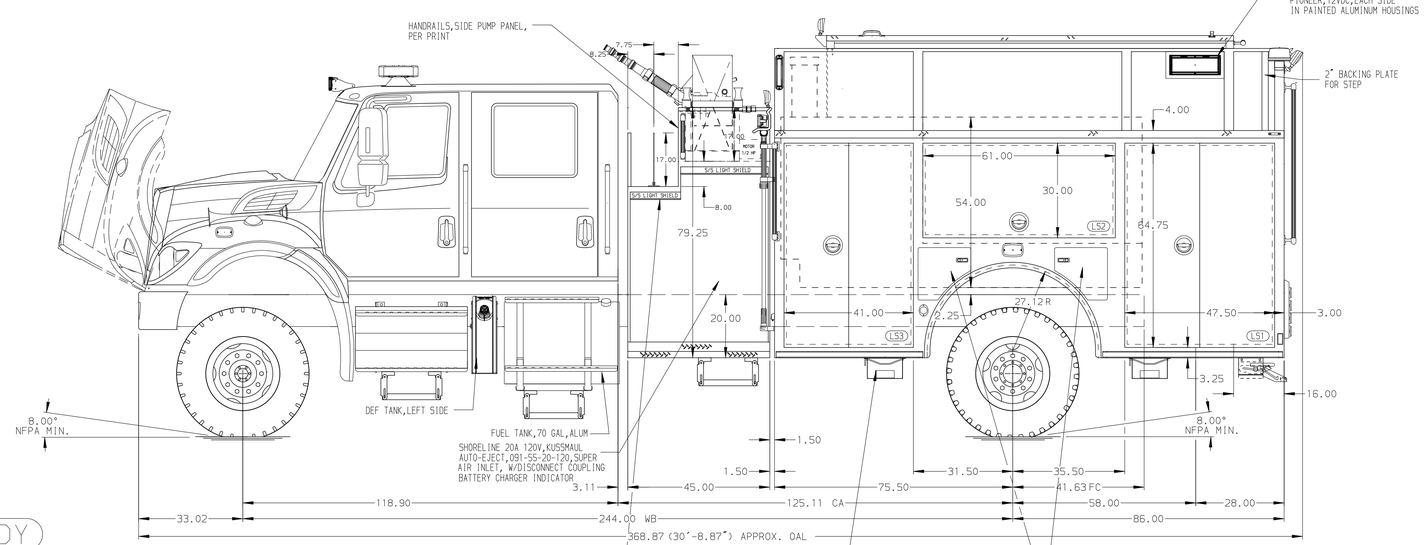

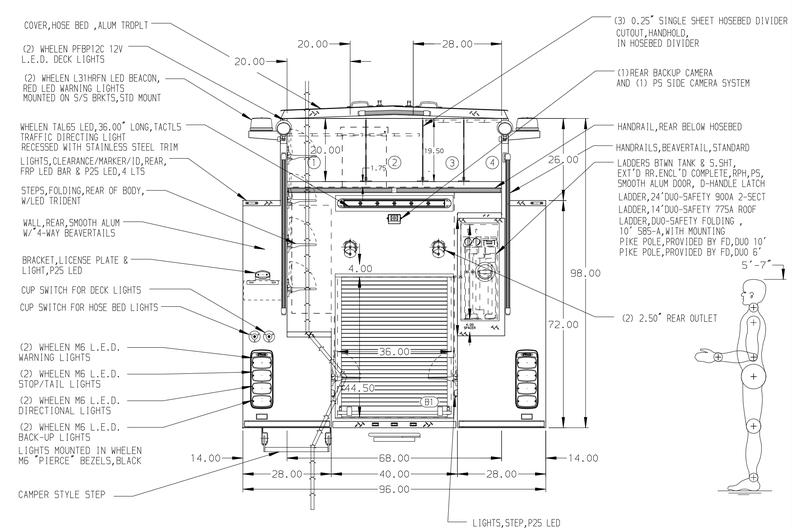

ALUMINUM BODY

NOTE

DIMENSIONS SHOWN ARE APPROXIMATE AND ARE SUBJECT TO MINOR DEVIATIONS AS MAY OCCUR OR BE NECESSARY IN CONSTRUCTION.
MINOR DETAILS NOT SHOWN.

REV	DATE	BY	CH
7	18AUG23	VHO	CCS
6	21JUN23	RHU	CCS
5	08MAY23	RHU	AJA

CHASSIS DATA — MAKE: IHC — MODEL: HV507 4X4

Pierce MANUFACTURING INC.

TITLE: 1500-D-1000P ,DELUGE,BOOSTER REEL 161" PUMPER BODY,LADDERS BETWEEN TANK AND BODY

FOR: SIERRA VOLUNTEER FIRE DEPARTMENT/CHAVEZ COUNTY ROSWELL,NM

DWG NO.: 38328AD

JOB NO.	SCALE	DRAWN BY	CHECKED BY	SHEET SIZE	SHEET NO.
38328	1:24	RHU	AJA	D	1 OF 1

DATE: 07APR23 (DRAWN) — 07APR23 (CHECKED)

View File Created 08-APR-2024 07:40:02