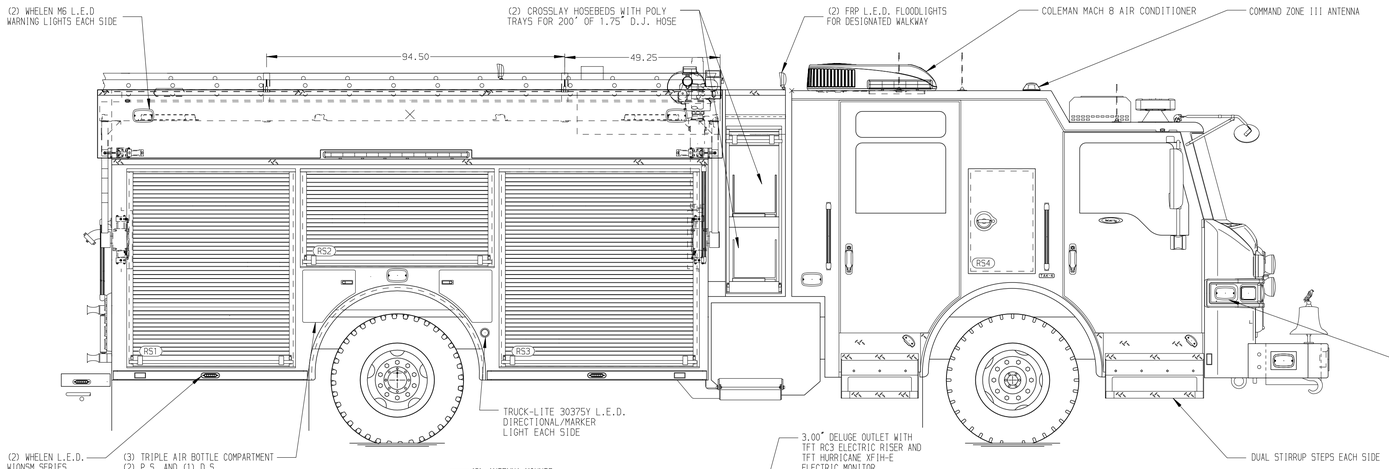

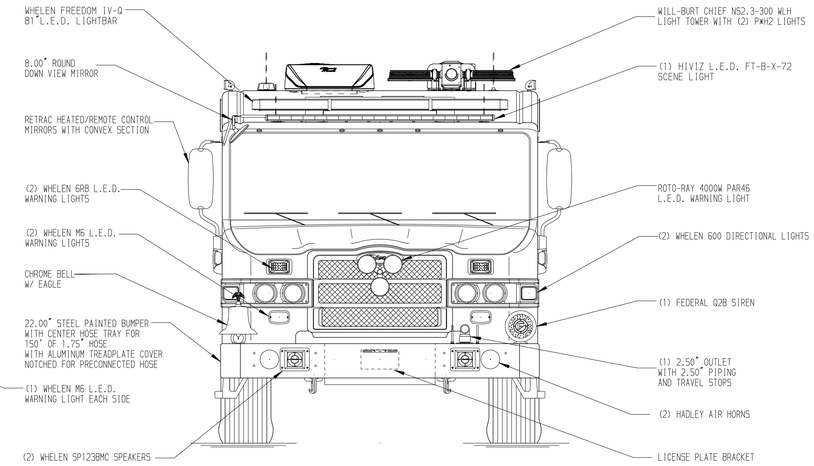

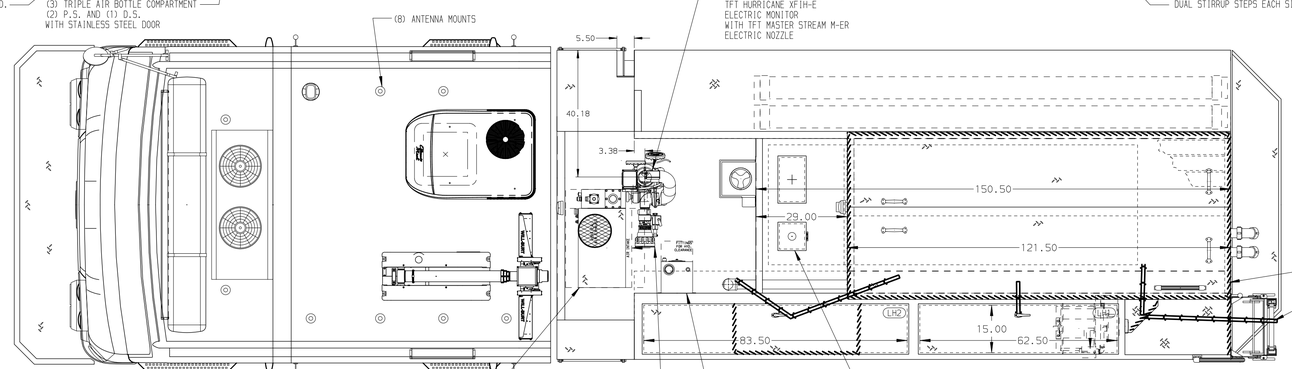

HOSEBED CAPACITIES

1. 250' OF 2.00" MASTER COMBAT FLOW HOSE
2. 250' OF 2.50" TRUID HOSE
3. 300' OF 3.00" ECH010 HOSE
4. 250' OF 1.75" D.J. POLY HOSE
5. 300' OF 3.00" ECH010 HOSE
6. 1050' OF 5.00" KEY PROFLO HOSE

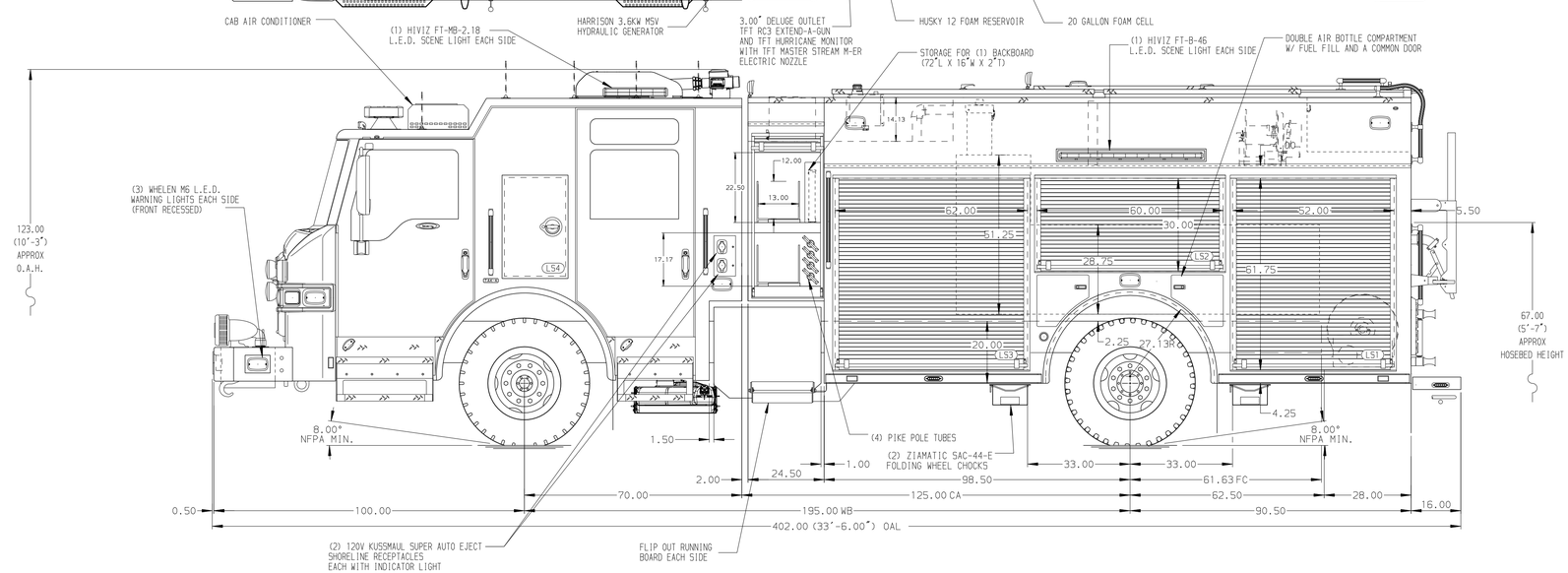

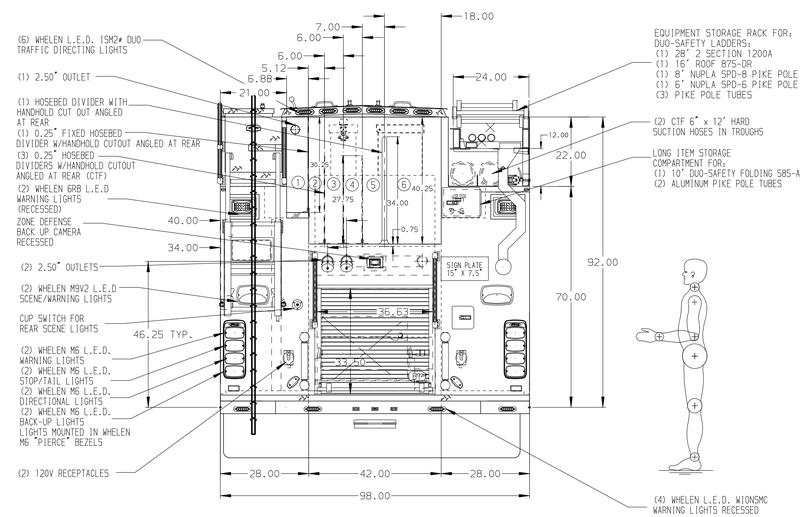

ALUMINUM BODY

SIDE ROLL AND FRONTAL IMPACT PROTECTION

NOTE

DIMENSIONS SHOWN ARE APPROXIMATE AND ARE SUBJECT TO MINOR DEVIATIONS AS MAY OCCUR OR BE NECESSARY IN CONSTRUCTION.
MINOR DETAILS NOT SHOWN.

1. AIR INLET/OUTLET WITH DISCONNECT FITTING ON D.S. PUMP PANEL
2. BATTERY CHARGER LOCATED IN BODY PER SHOP ORDER
3. ONE ADJUSTABLE FULL WIDTH/DEPTH SPECIAL SIDE HEIGHT SHELF LOCATED PER SHOP ORDER
4. FOUR ADJUSTABLE FULL WIDTH/FULL DEPTH SHELVES LOCATED PER SHOP ORDER
5. TWO ADJUSTABLE SLIDE-OUT TRAYS LOCATED PER SHOP ORDER
6. ONE ADJUSTABLE TILTING SLIDE-OUT TRAY LOCATED PER SHOP ORDER
7. THREE FLOOR MOUNTED SLIDE-OUT TRAYS LOCATED PER SHOP ORDER
8. ONE SWING-OUT ALUMINUM TOOL BOARD WITH PAC TRAC LOCATED PER SHOP ORDER
9. ONE VERTICAL PARTITION IN HATCH COMPARTMENT PER SHOP ORDER
10. STORAGE BIN FOR (4) EXTINGUISHERS LOCATED PER SHOP ORDER
11. ONE HANNAY BOOSTER REEL MODEL SBEF 34-23-24 LOCATED IN COMPARTMENT B1 WITH CAPACITY FOR 150' OF 1.00" HOSE
12. CIRCUIT BREAKER PANEL LOCATED PER SHOP ORDER
13. ONE HANNAY ECR1618-17-18 ELECTRIC REWIND CORD REEL LOCATED PER SHOP ORDER WITH 200' OF 10/3 CABLE
14. EXTINGUISHER RACK LOCATED PER SHOP ORDER
15. DEF TANK MOUNTED UNDER CAB ON THE DRIVER'S SIDE
16. ONE VERTICAL PARTITION LOCATED PER SHOP ORDER
17. TWO 120V NEMA DUPLEX RECEPTACLES LOCATED IN THE CAB PER SHOP ORDER
18. TWO 120V NEMA DUPLEX RECEPTACLES LOCATED IN THE BODY PER SHOP ORDER

REV	DATE	BY	CH
7	29JAN24	LST	NPE
6	13DEC23	LST	NPE

CHASSIS DATA
MAKE: PIERCE
MODEL: VELOCITY

Pierce MANUFACTURING INC.

TITLE: 1500-D-520P, 500G WATER, 20G FOAM, 189" PUC RESCUE RS HYD. LADDER RACK, (3) XLAYS, GENERATOR, DELUGE
FOR: THE WOODLANDS TOWNSHIP THE WOODLANDS, TEXAS
DWG NO.: 38365AD

JOB NO.	38365
SCALE	1:24
DATE	
DRAWN BY	LST 06JUL23
CHECKED BY	NPE 22SEP23
SHEET SIZE	D
SHEET NO.	1 OF 1

View File Created 07-FEB-2024 10:45:25