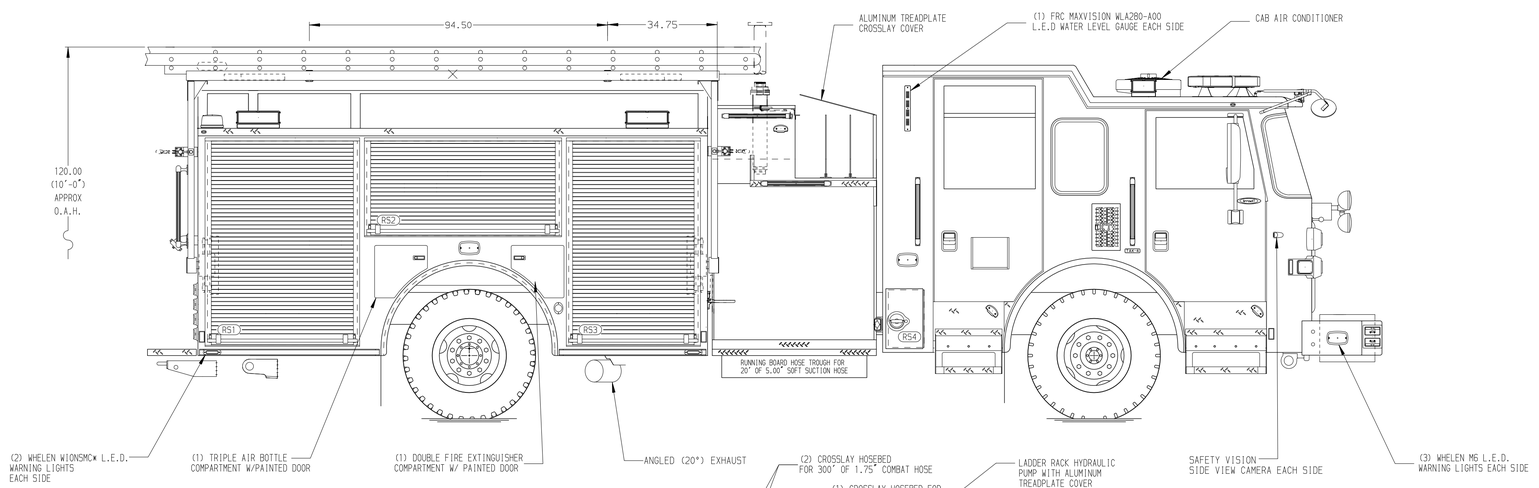

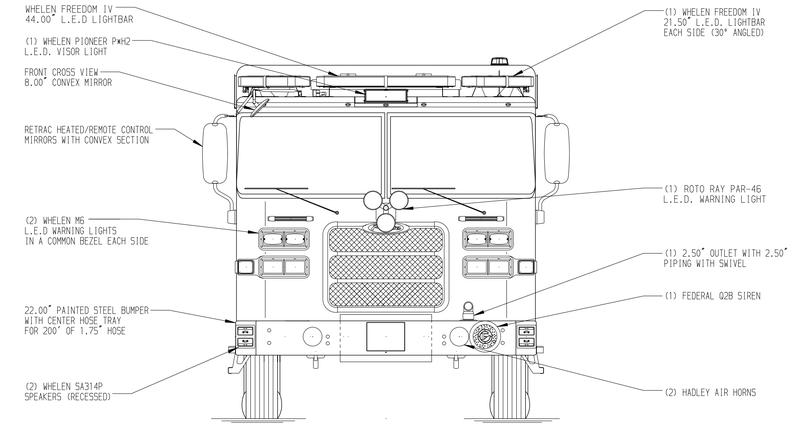

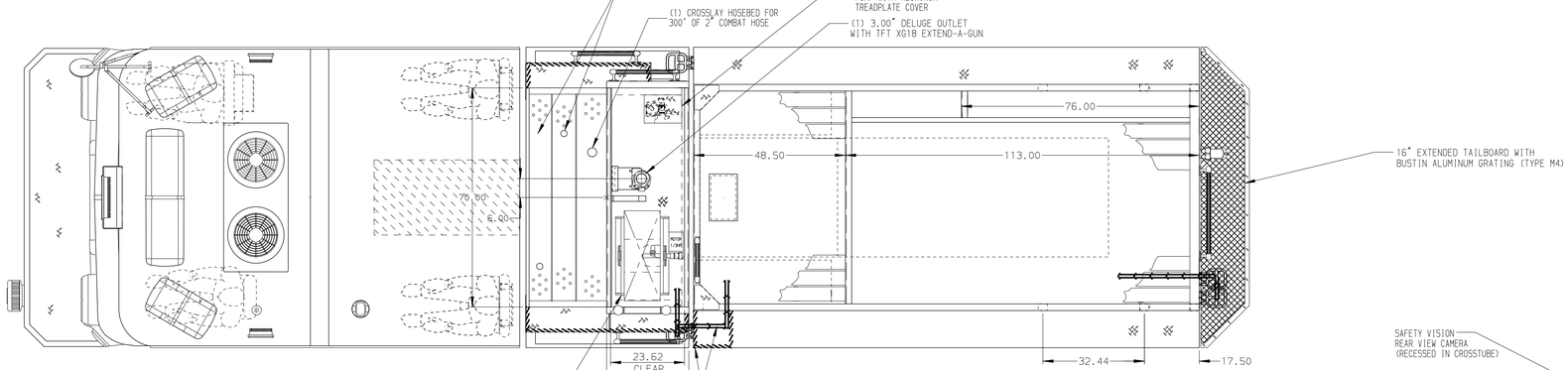

HOSEBED CAPACITIES

1. - 400' OF 2.00" D.J. POLY HOSE (DOUBLE STACK)
2. - 1200' OF 5.00" D.J. POLY HOSE
3. - 400' OF 3.00" D.J. POLY HOSE (DOUBLE STACK)
4. - 150' OF 1.75" D.J. POLY HOSE (SINGLE STACK)
5. - 125' OF 1.75" D.J. POLY HOSE (ABOVE BACKBOARD)

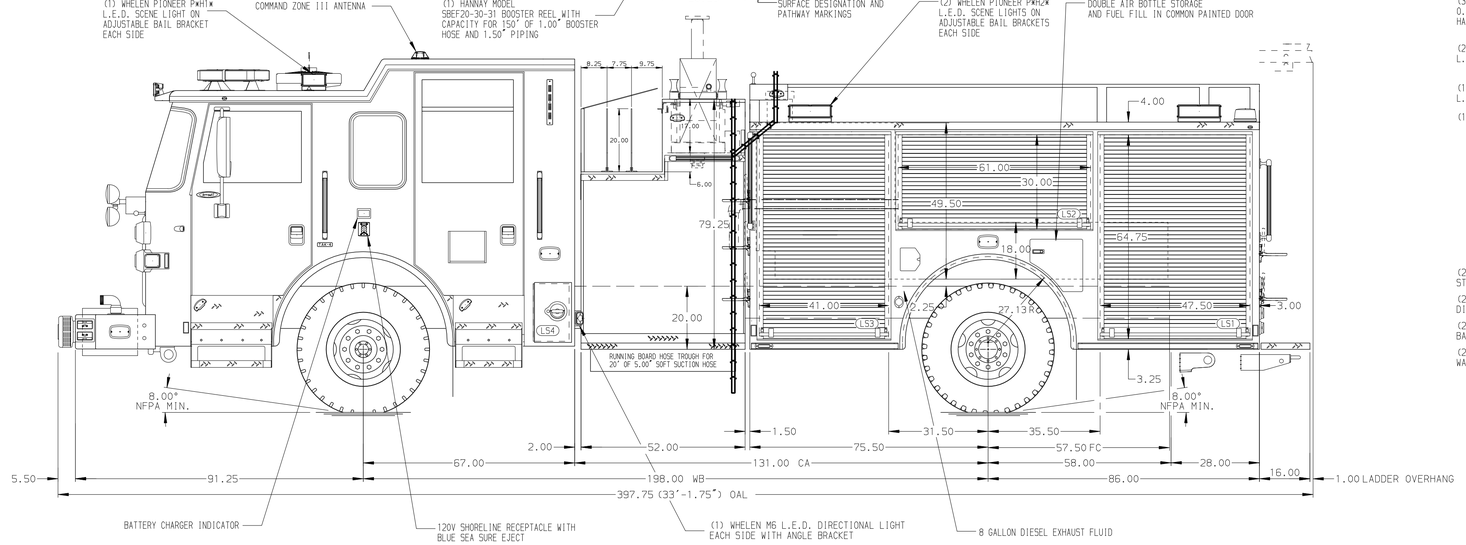

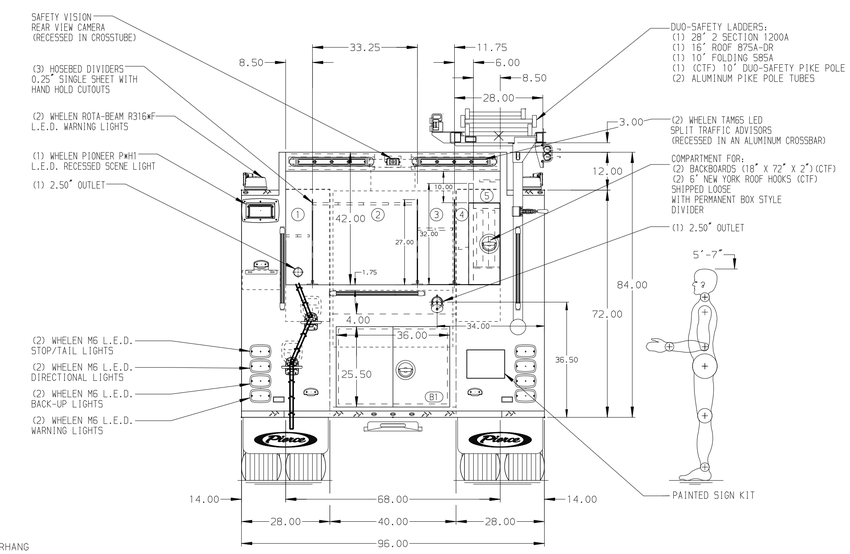

ALUMINUM BODY

SIDE ROLL AND FRONTAL IMPACT PROTECTION

NOTE

DIMENSIONS SHOWN ARE APPROXIMATE AND ARE SUBJECT TO MINOR DEVIATIONS AS MAY OCCUR OR BE NECESSARY IN CONSTRUCTION.
MINOR DETAILS NOT SHOWN.

1. AIR INLET/OUTLET WITH DISCONNECT FITTING ON D.S. PUMP PANEL
2. BATTERY CHARGER LOCATED IN DRIVER'S SIDE AUX. CAB STORAGE COMPARTMENT
3. ONSPOT AUTOMATIC TIRE CHAINS TO BE PROVIDED AT THE REAR
4. WHEEL CHOCKS AND BRACKETS (CTF)
5. AIR COMPRESSOR LOCATED IN PASSENGER SIDE AUX. STORAGE COMPARTMENT

REV	DATE	BY	CH
B	22MAR24	JJB	JJR
A	09FEB24	AMI	JJR

CHASSIS DATA — MAKE: PIERCE — MODEL: ARROW XT

Pierce MANUFACTURING INC.

TITLE: 1500-D-500 GALLON WATER TANK, 161" PUMPER BODY HYDRAULIC LADDER RACK, (3) XLAYS, HOSEREEL, DELUGE

FOR: FORSYTH COUNTY CUMMING, GEORGIA

DWG NO.: 38378AD-SH1

JOB NO.	38378
SCALE	1:24
DATE	
DRAWN BY	JJB 22DEC23
CHECKED BY	JJR 22DEC23
SHEET SIZE	D
SHEET NO.	1 OF 2

View File Created 25-MAR-2024 07:08:47