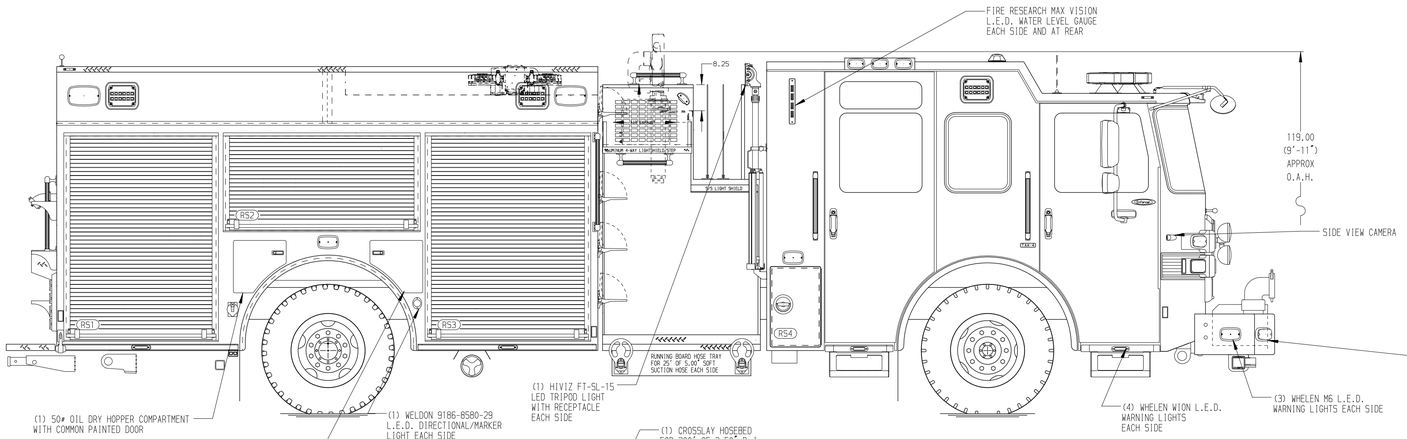

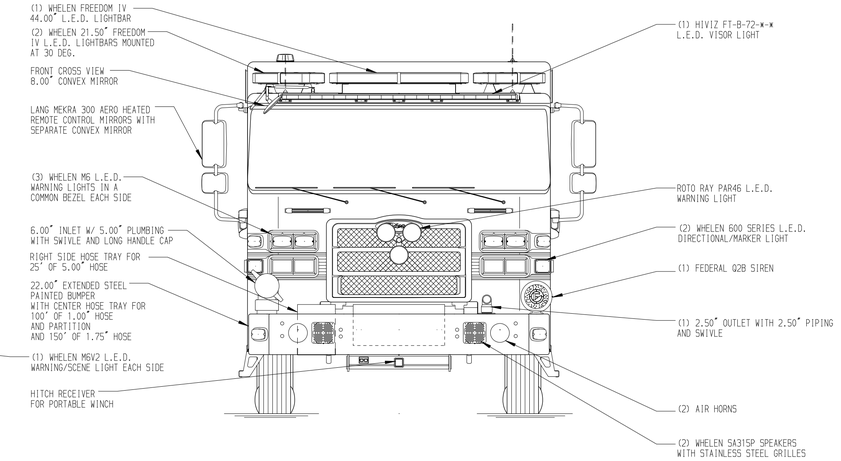

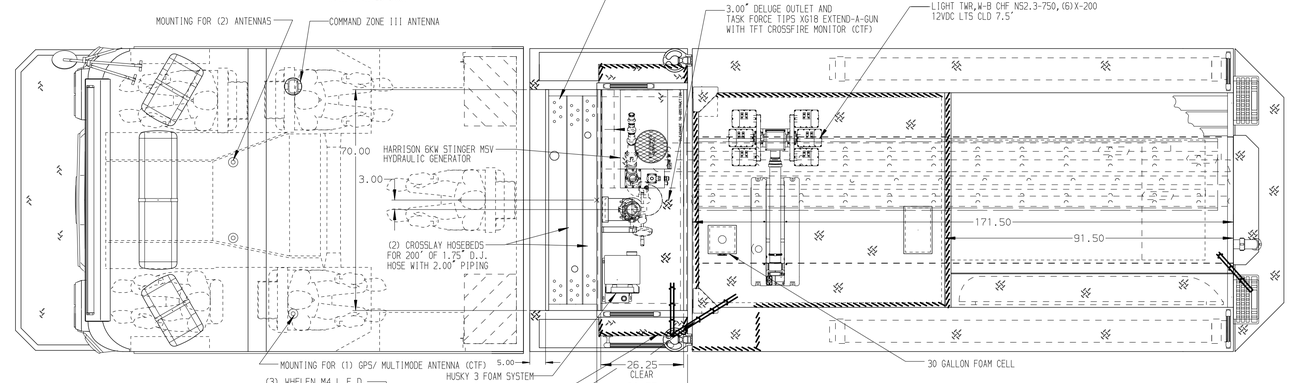

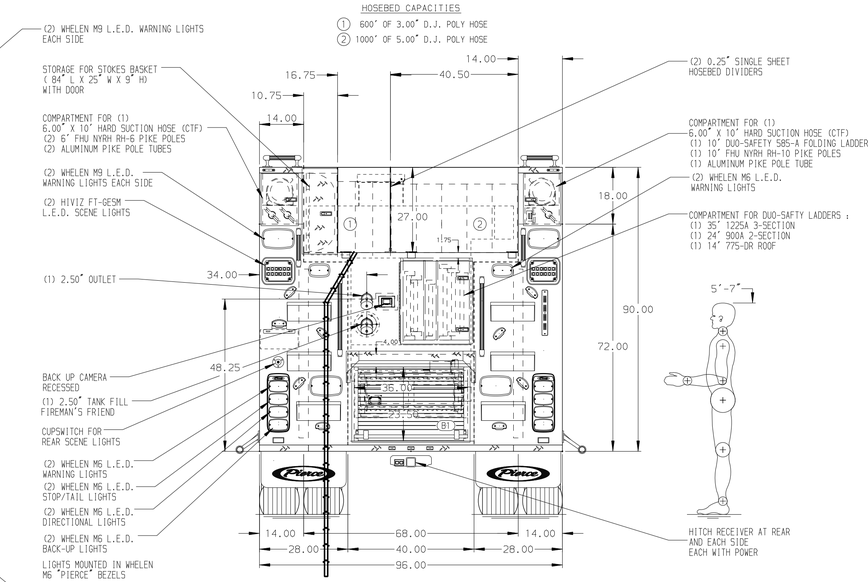

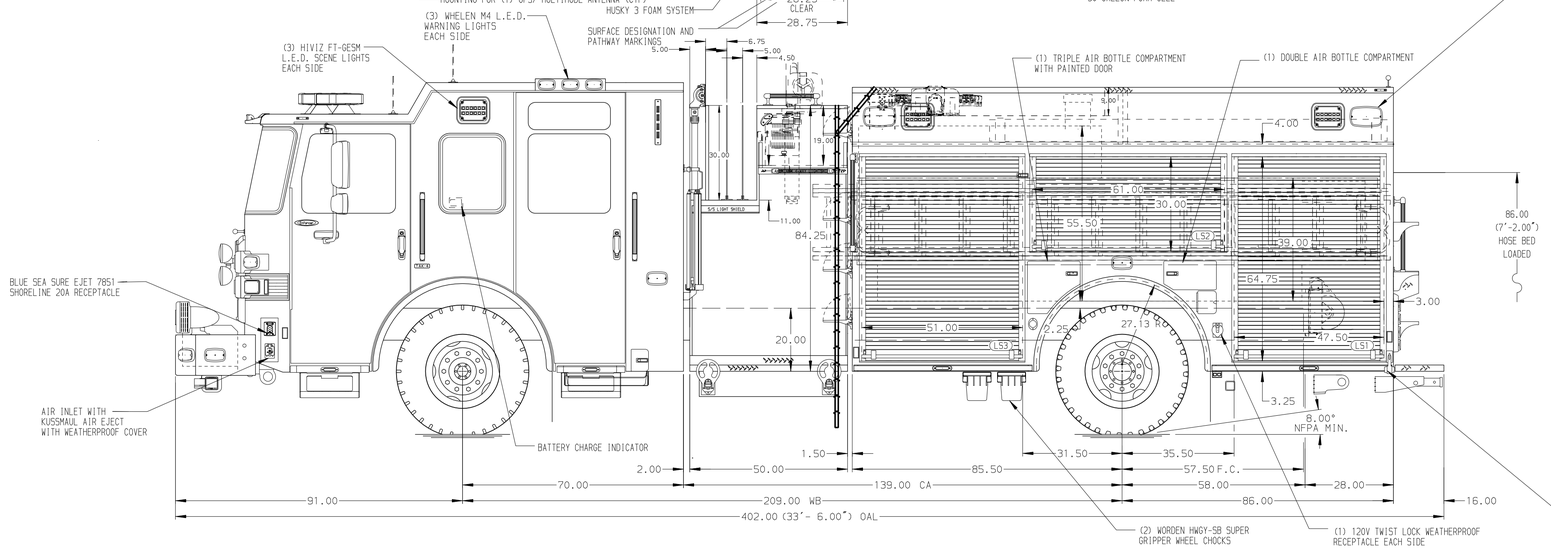

ALUMINUM BODY

SIDE ROLL AND FRONTAL IMPACT PROTECTION

NOTE

DIMENSIONS SHOWN ARE APPROXIMATE AND ARE SUBJECT TO MINOR DEVIATIONS AS MAY OCCUR OR BE NECESSARY IN CONSTRUCTION.
MINOR DETAILS NOT SHOWN.

1. ONSPOT AUTOMATIC TIRE CHAINS TO BE PROVIDED AT REAR
2. AIR OUTLET WITH SHUT OFF VALVE ON THE DRIVER'S SIDE PUMP PANEL
3. PACCAR DEF TANK MOUNTED UNDER CAB ON THE DRIVER'S SIDE
4. KUSSMAUL BATTERY CHARGER LOCATED IN THE CAB PER SHOP ORDER
5. TWO 120V NEMA DUPLEX RECEPTACLES LOCATED IN THE CAB PER SHOP ORDER

REV	DATE	BY	CH
7	01JUL24	LST	ZWE
6	15FEB24	LST	CSH
5	12FEB24	LST	CSH
4	19JAN24	KLE	CSH
3	17JAN24	KLE	CSH

CHASSIS DATA: MAKE PIERCE; MODEL ENFORCER

Pierce MANUFACTURING INC.

TITLE: 1500-D-750P, 720G WATER, 30G FOAM 171" FH FD W/ NOTCH LADDERS THRU TANK, (3) CROSSLAYS, DELUGE, GENERATOR

FOR: LAGRANGE FIRE & RESCUE DEPARTMENT, LAGRANGE, KENTUCKY

DWG NO.: 38387AD-SH1

JOB NO.	SCALE	DRAWN BY	CHECKED BY	SHEET SIZE	SHEET NO.
38387	1:24	LST	CDU	D	1 OF 2

DATE: 09OCT23 / 10OCT23

View File Created 02-JUL-2024 09:37:31