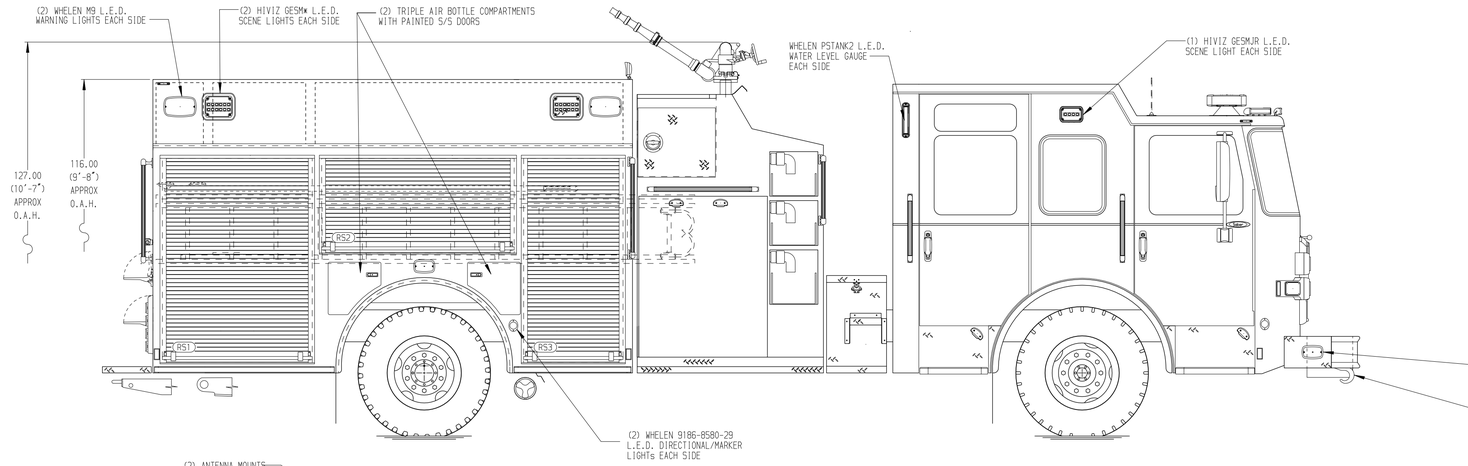

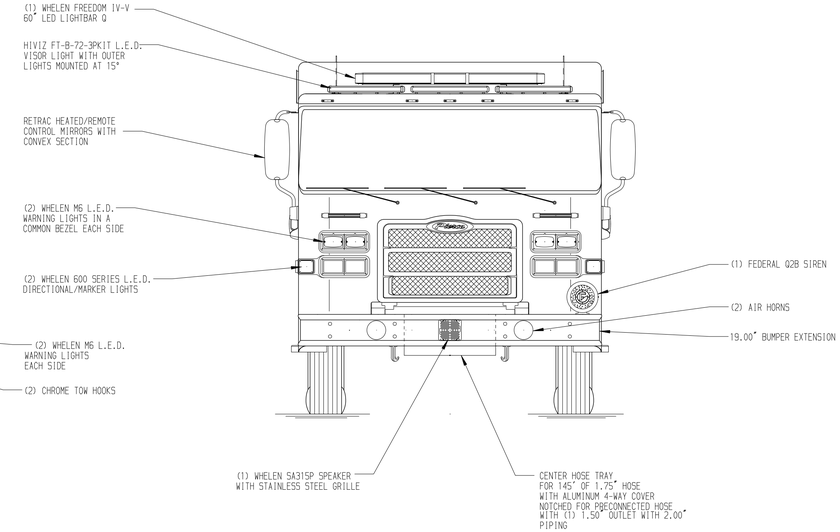

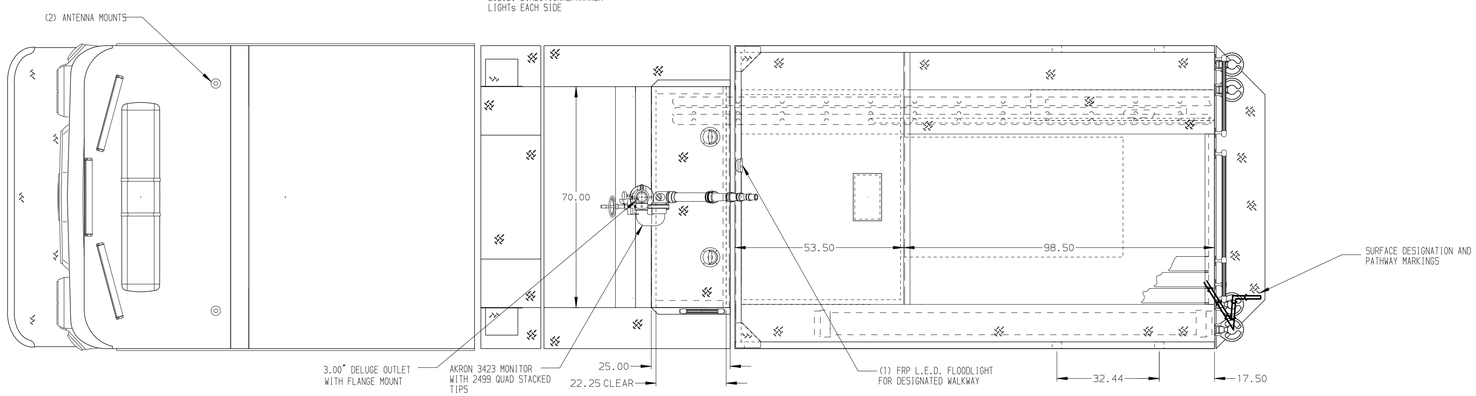

HOSEBED CAPACITIES

1. 600' OF 2.50" D.J. POLY HOSE
2. 1300' OF 5.00" D.J. POLY HOSE
3. 600' OF 3.00" D.J. POLY HOSE
4. OPEN

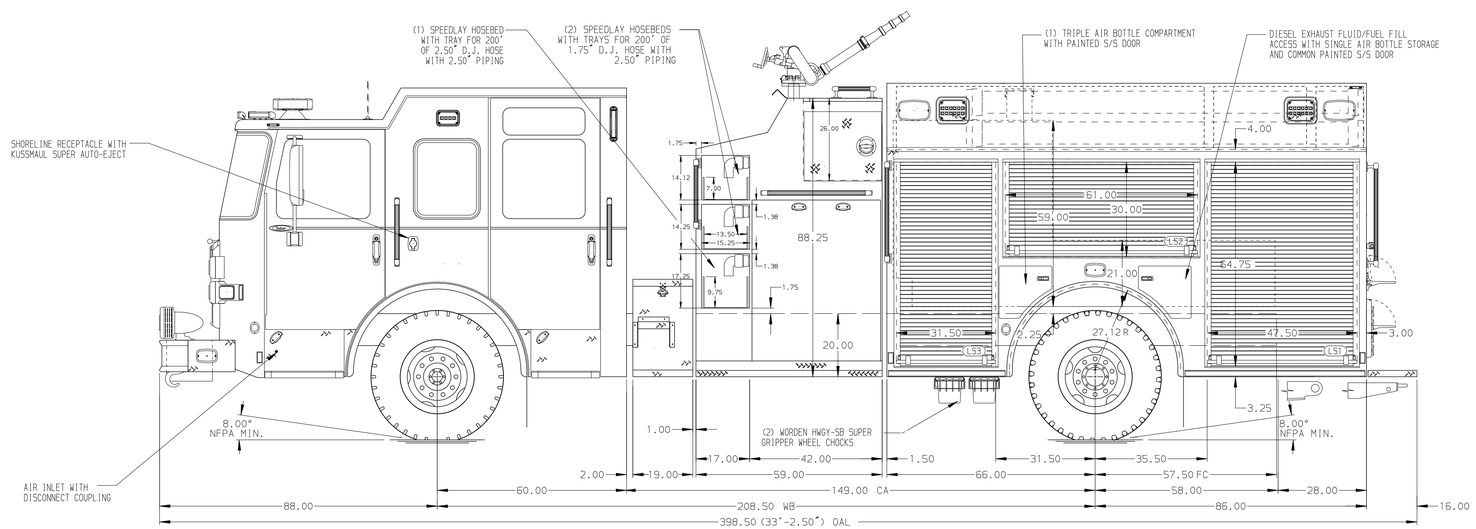

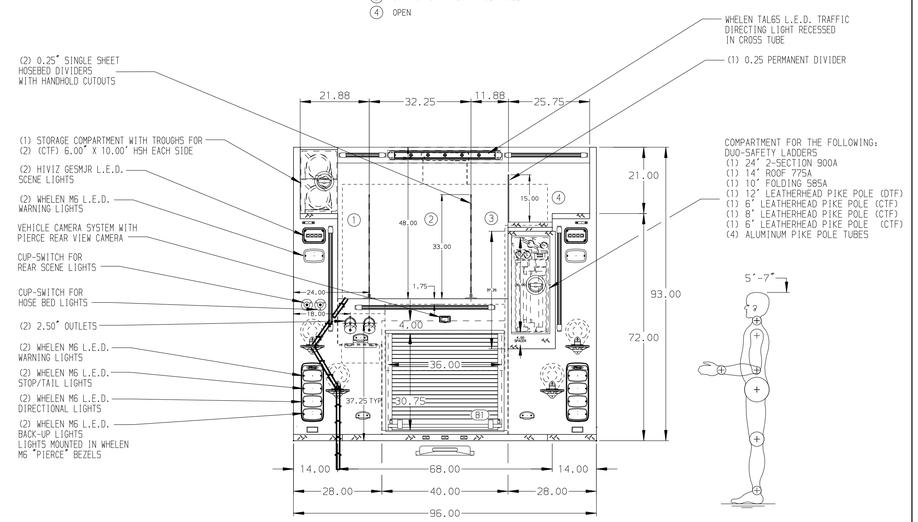

ALUMINUM BODY

NOTE

DIMENSIONS SHOWN ARE APPROXIMATE AND ARE SUBJECT TO MINOR DEVIATIONS AS MAY OCCUR OR BE NECESSARY IN CONSTRUCTION.
MINOR DETAILS NOT SHOWN.

CUSTOMER APPROVAL

APPROVED BY: _____

DATE: _____

REV	DATE	BY	CH
▽	-	-	-

CHASSIS DATA — MAKE: PIERCE — MODEL: SABER FR

Pierce MANUFACTURING INC.

TITLE: 1500-D-750P, 750G WATER, 152" FH FDLER, (3)SPDLAYS, DELUGE, LADDERS BTWN SS, HSH COMPT

FOR: CAIRO VOLUNTEER FIRE DEPARTMENT, CAIRO, NEBRASKA

DWG NO.: 38452AD

JOB NO.	SCALE	DRAWN BY	CHECKED BY	SHEET SIZE	SHEET NO.
38452	1:24	BTH	EGO	D	1 OF 1

DATE: 27SEP22 — 07OCT22

View File Created 10-OCT-2022 06:58:16