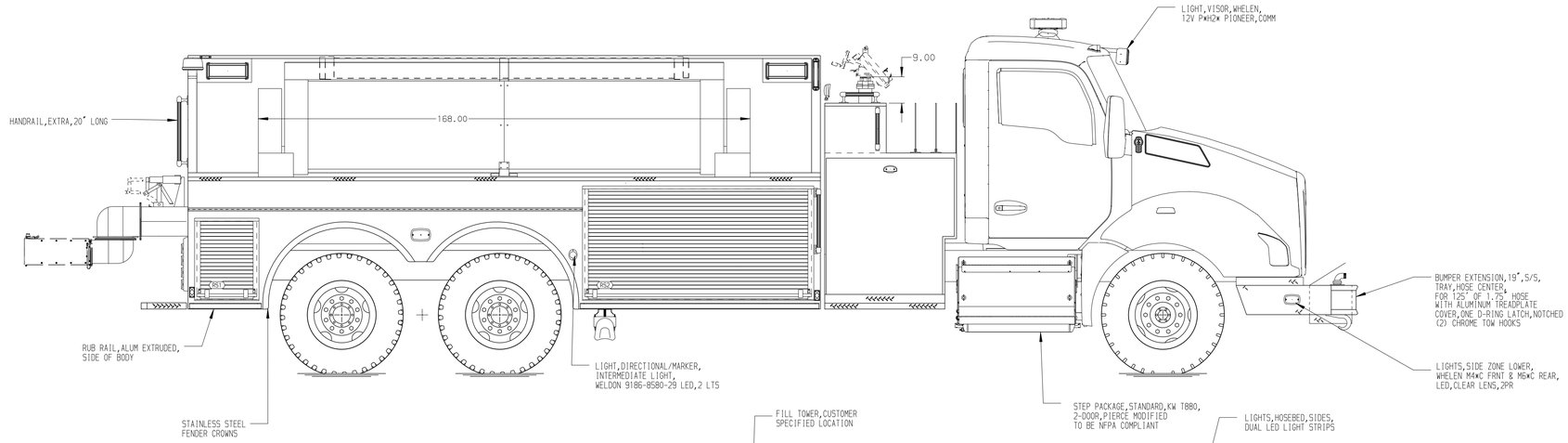

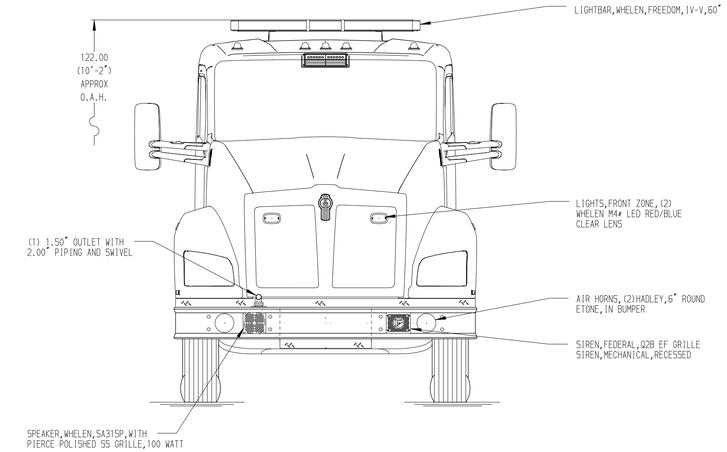

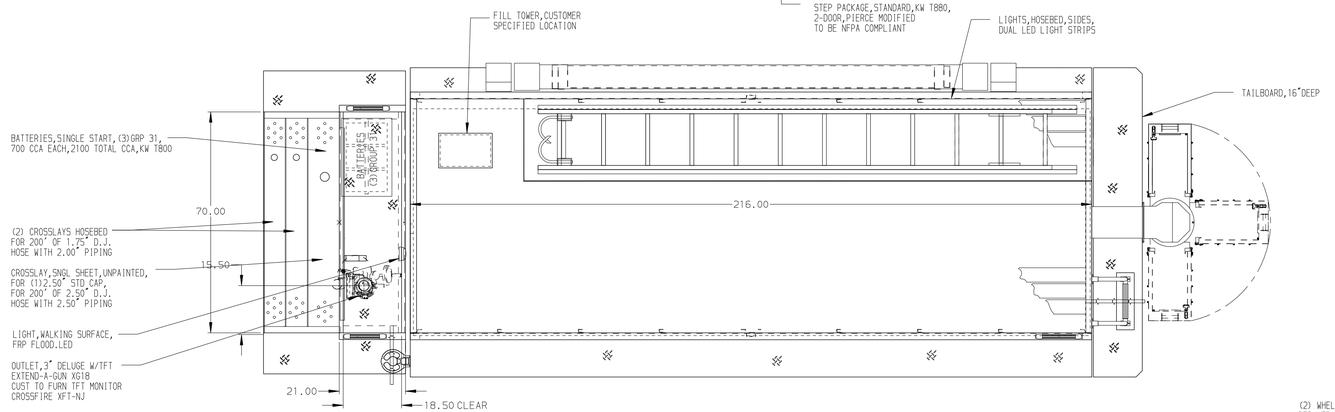

HOSEBED CAPACITIES

1. 900' OF 5.00" D.J. POLYESTER HOSE
2. 400' OF 3.00" D.J. POLYESTER HOSE

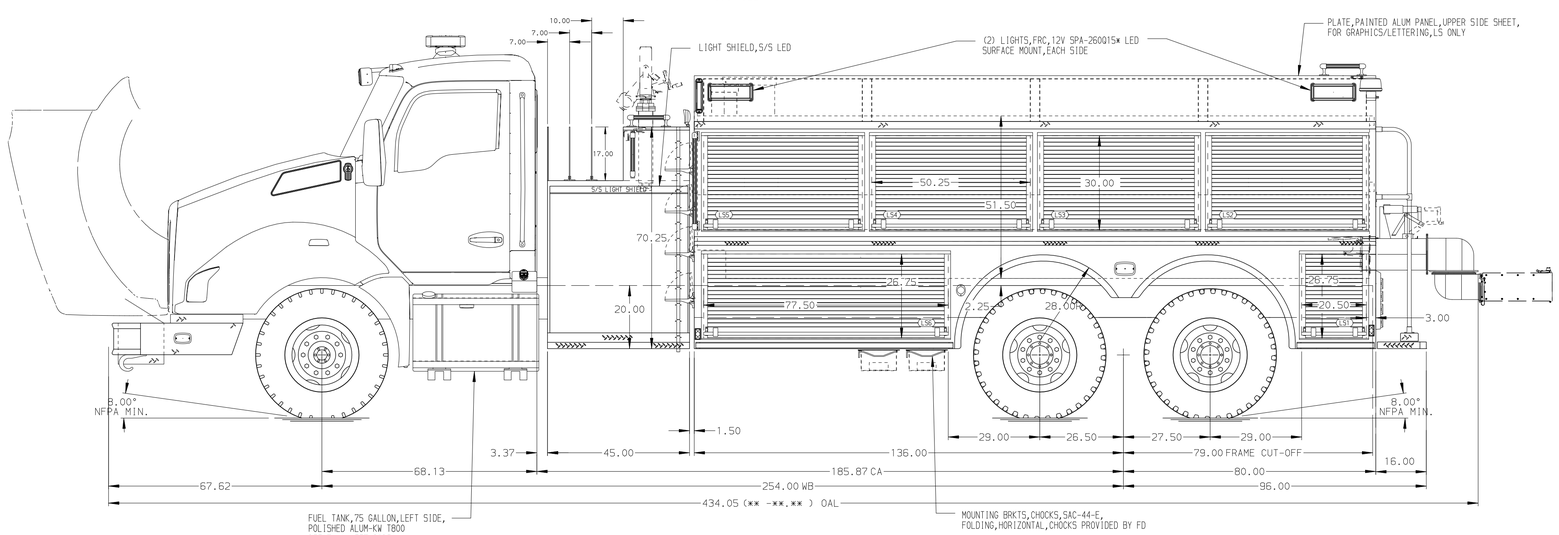

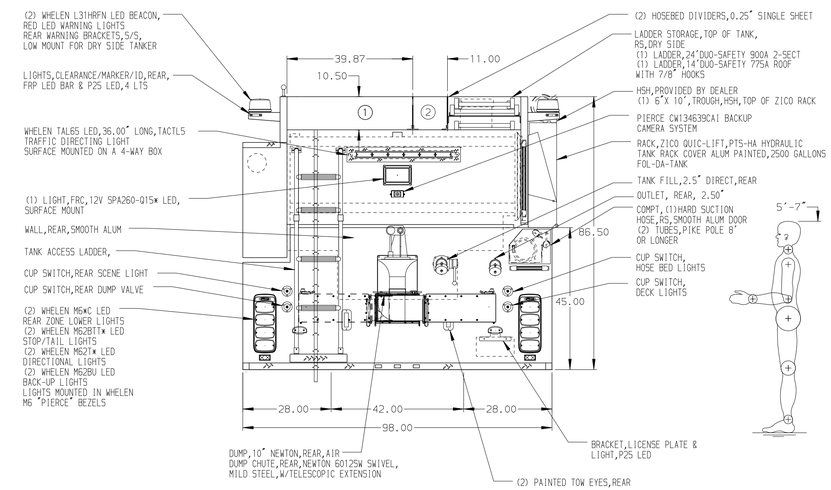

ALUMINUM BODY

MAXIMUM OAH 125"

NOTE

DIMENSIONS SHOWN ARE APPROXIMATE AND ARE SUBJECT TO MINOR DEVIATIONS AS MAY OCCUR OR BE NECESSARY IN CONSTRUCTION.
MINOR DETAILS NOT SHOWN.

REV	DATE	BY	CH
B	19JUL23	VHO	CCS
A	22MAY23	JLA	CCS

CHASSIS DATA
MAKE: KENWORTH
MODEL: T880

Pierce MANUFACTURING INC.

TITLE: 2000-D-2500P,216"BODY,HIGH SIDE DRY SIDE 45"SIDE CONTROL,(1)1.5"(1)2.5"CROSSLAYS

FOR: FREDERICKSBURG FIRE DEPARTMENT FREDERICKSBURG, TEXAS

DWG NO.: 38459AD

JOB NO.	38459
SCALE	1:24
DATE	
DRAWN BY	JLA
DATE	17FEB23
CHECKED BY	AJA
DATE	06MAR23
SHEET SIZE	D
SHEET NO.	1 OF 1

View File Created 21-JUL-2023 06:55:07