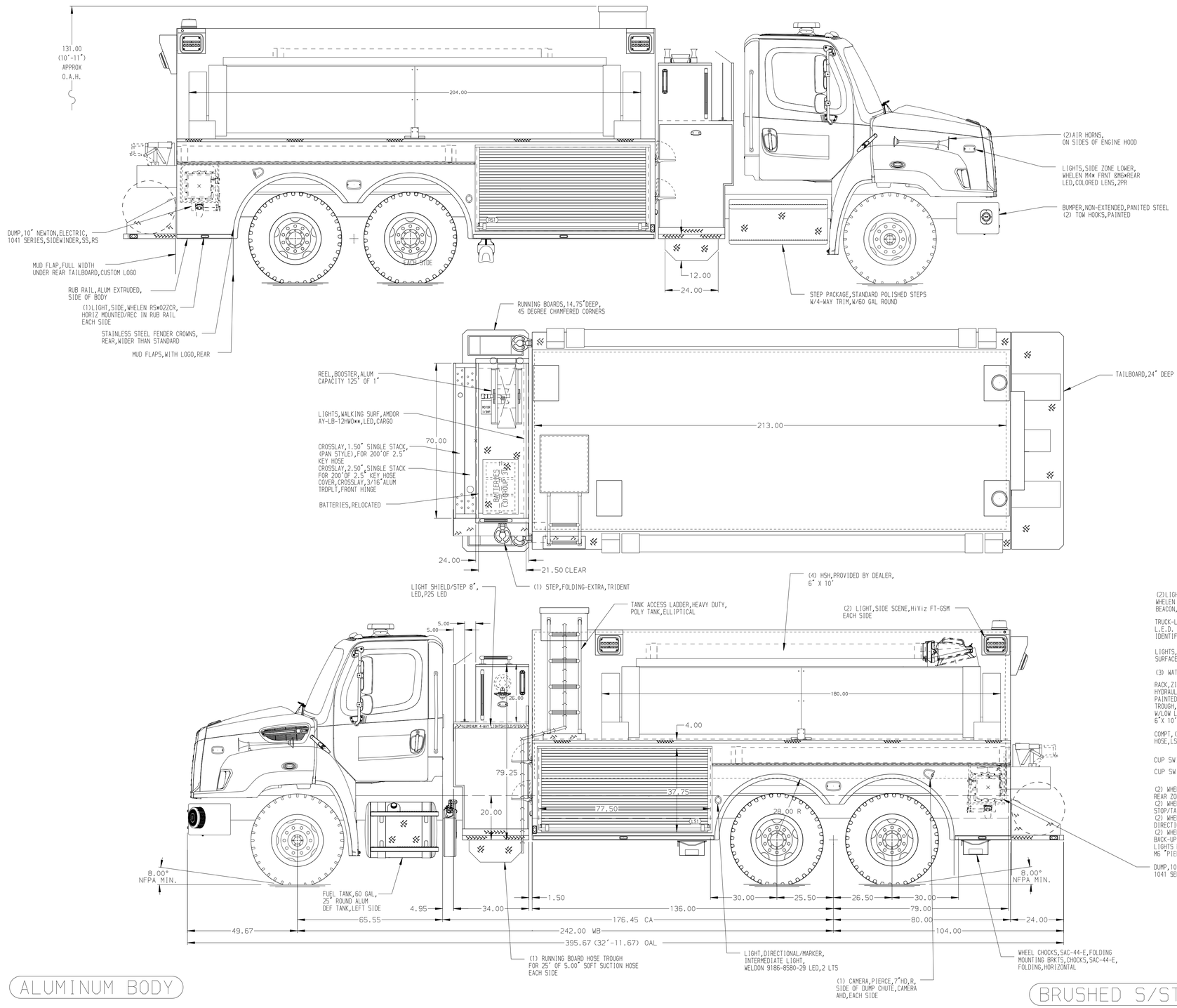

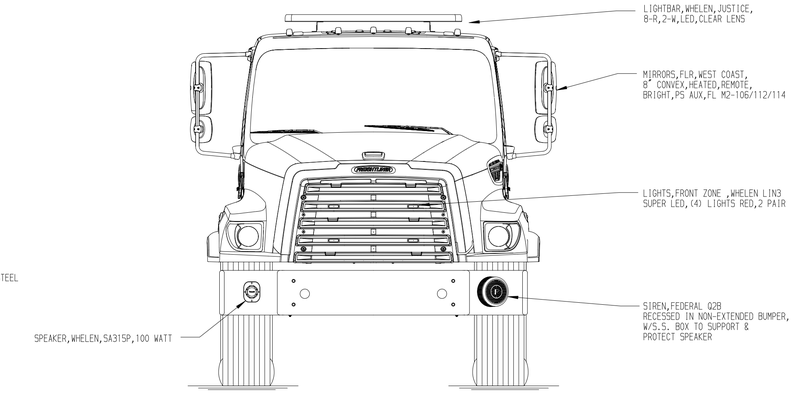

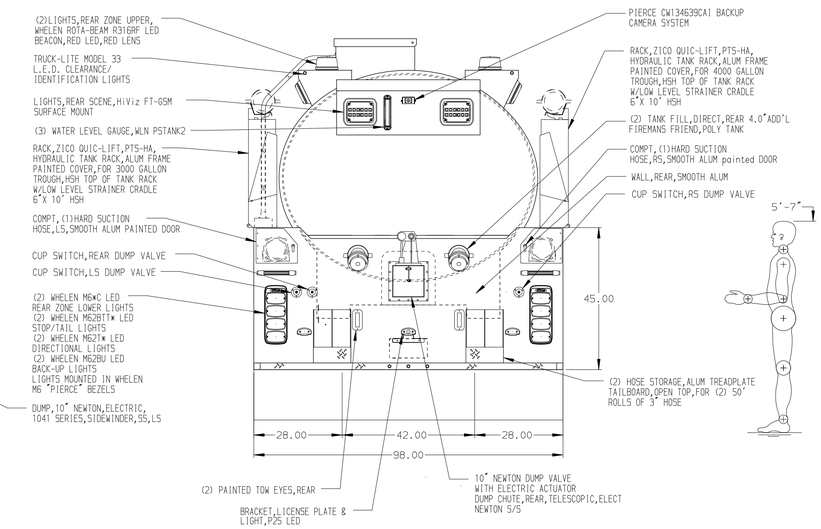

ALUMINUM BODY

BRUSHED S/STL WRAP

NOTE

DIMENSIONS SHOWN ARE APPROXIMATE AND ARE SUBJECT TO MINOR DEVIATIONS AS MAY OCCUR OR BE NECESSARY IN CONSTRUCTION.
MINOR DETAILS NOT SHOWN.

REV	DATE	BY	CH
7	30JUN23	JLA	JAP
6	30MAY23	JLA	JAP
5	24MAR23	JLA	AJA

CHASSIS DATA
MAKE: FL
MODEL: 114SD

Pierce MANUFACTURING INC.

TITLE: 1500-D-3500 POLY ELLIPTICAL,216"BODY
34"SIDE CONTROL,(1)1.5"&(1)2.5"CROSSLAYS SINGLE STCK

FOR: WESLEY CHAPEL VFD,INC
WESLEY CHAPEL, NORTH CAROLINA

DWG NO. 38467AD

JOB NO. 38467
SCALE 1:24
DATE
DRAWN BY JLA 25FEB23
CHECKED BY AJA 07MAR23
SHEET SIZE D
SHEET NO. 1 OF 1

View File Created 30-JUN-2023 08:56:40