RIGHT SIDE COMPARTMENTS CONTAIN THE FOLLOWING:

COMPARTMENT RS1 CONTAINS:
- (4) STD DEPTH ADJ SHELVES
- (1) VERTICAL COMPARTMENT DIVIDER
- (1) 20A,120V DUPLEX RECEPTACLE
-
-
-

COMPARTMENT RS2 CONTAINS:
- (1) STD DEPTH ADJ SLIDE OUT/TILT TRAY
-
-

COMPARTMENT RS3 CONTAINS:
- (1) VERTICAL COMPARTMENT DIVIDER
- (2) STD DEPTH ADJ SHELVES
- SLANTED COMPARTMENT FLOOR
- (1) LAZY SUSAN HYDRAULIC TOOL MOUNT ON FLOOR MOUNTED TRAY
- (1) 20A,120V DUPLEX RECEPTACLE
- (1) 20A,120V T.L. RECEPTACLE
-

COMPARTMENT RS4 CONTAINS:
- (1) VERTICAL COMPARTMENT DIVIDER
- (1) STOKES BASKET RACK
- (1) REAR WALL DIVIDER (FORWARD PORTION)
- (1) RACK FOR 3 PIKE POLES
- (2) STD DEPTH ADJ SHELVES
-

COMPARTMENT RS5 CONTAINS:
- (1) RACK FOR 2 PIKE POLES & LONG TOOLS
-

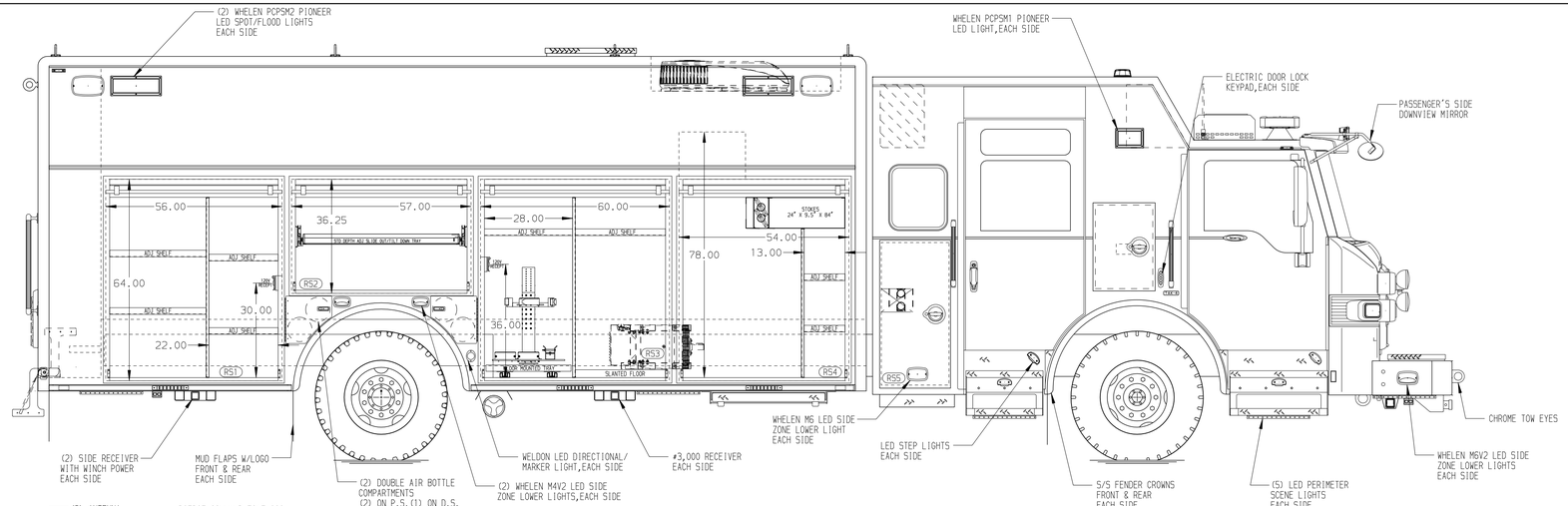

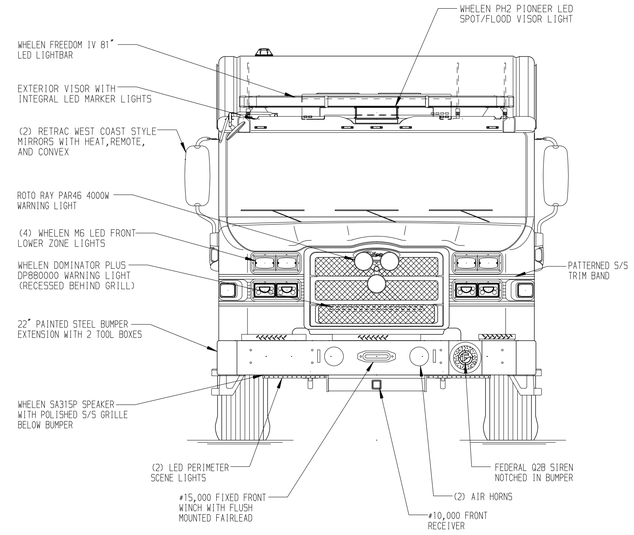

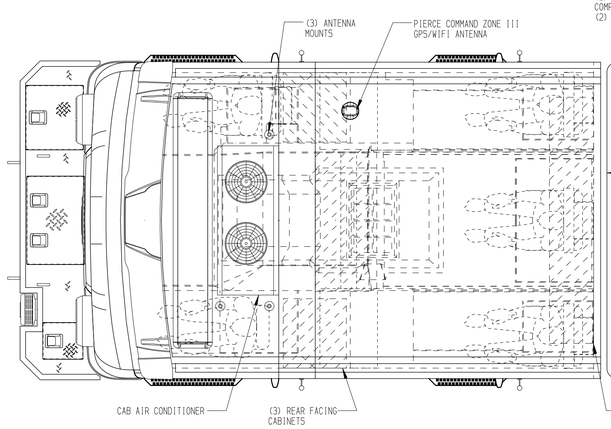

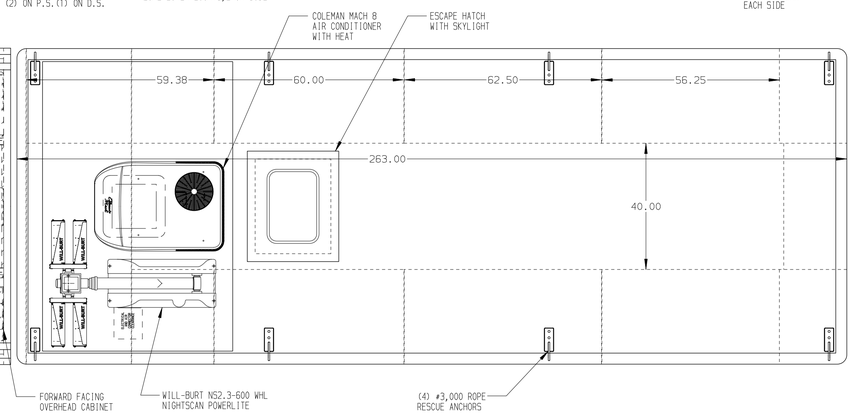

LEFT SIDE COMPARTMENTS CONTAIN THE FOLLOWING:

COMPARTMENT LS1 CONTAINS:
- (1) STD DEPTH ADJ SLIDE OUT/TILT TRAY
- (2) STD DEPTH ADJ SLIDE OUT TRAYS
- (1) FLOOR MOUNTED TRAY
-
-
-

COMPARTMENT LS2 CONTAINS:
- (1) STD DEPTH ADJ SLIDE OUT/TILT TRAY
-
-

COMPARTMENT LS3 CONTAINS:
- (1) VERTICAL COMPARTMENT DIVIDER
- (3) STD DEPTH ADJ SHELF
- SLANTED COMPARTMENT FLOOR-FORWARD
- (1) 20A,120V T.L. RECEPTACLE
- (1) 20A,120V DUPLEX RECEPTACLE
-

COMPARTMENT LS4 CONTAINS:
- (1) RACK FOR 3 PIKE POLES
- (1) VERTICAL COMPARTMENT DIVIDER
- (1) STOKES BASKET RACK
- (2) 3/4 DEPTH SLIDEMASTER TRAYS WITH TOOLBOARDS
- (1) HORIZONTAL FLOOR EXTENSION
- (1) CIRCUIT BREAKER PANEL
- (1) SUB FEED BOX
- (1) GENERATOR METER PANEL
- (1) NIGHT SCAN CONTROLLER(LOCATE AT POST PAINT)
-
-
-

COMPARTMENT LS5 CONTAINS:
- (1) RACK FOR 2 PIKE POLES & LONG TOOLS
-

REAR COMPARTMENTS CONTAINS THE FOLLOWING:

COMPARTMENT B1 CONTAINS:
- (2) ADJUSTABLE SHELVES
- (1) 20A,120V DUPLEX RECEPTACLE
- (1) ELECTRIC CORD REEL W/200' OF 10/3 YELLOW CORD
- (1) AIR OUTLE WITH SHUT-OFF VALVE
- PRESSURE GAUGE AND REGULATOR

COMPARTMENT B2 CONTAINS:
- (2) ADJUSTABLE SHELVES
-
-

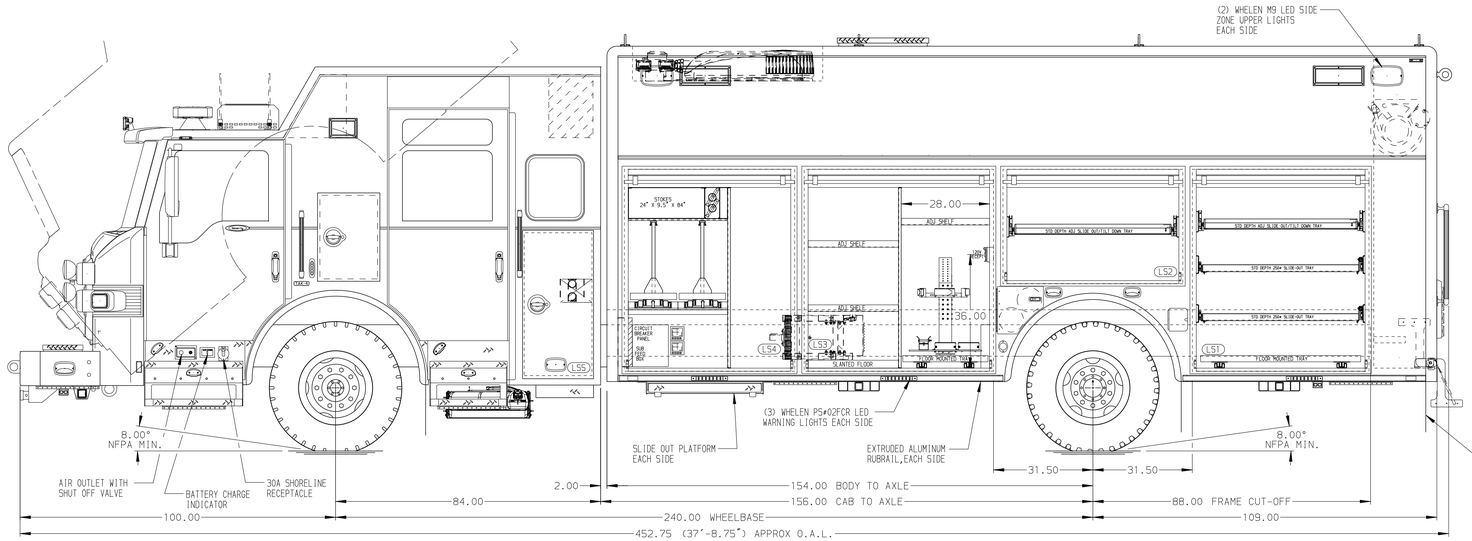

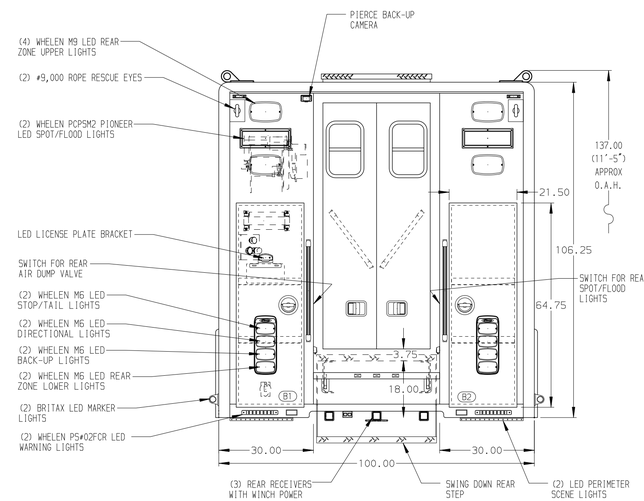

NOTE

DIMENSIONS SHOWN ARE APPROXIMATE AND ARE SUBJECT TO MINOR DEVIATIONS AS MAY OCCUR OR BE NECESSARY IN CONSTRUCTION.
MINOR DETAILS NOT SHOWN.

NOTES:
1. ONSPOT AUTOMATIC TIRE CHAINS
2. FLOOR IN CAB AND CREW CAB TO BE ALUMINUM TREADPLATE
3. BRUSHED S/S SCUFFPLATES ON CAB AND CREW CAB DOORS
4. KUSSMAUL CHARGER LOCATED BEHIND THE DRIVER'S SEAT
5. AMDOR LED LIGHT STRIPS IN ALL BODY COMPARTMENTS
6. ONAN 25kW SINGLE PHASE PTO DRIVEN GENERATOR WITH SPLASH GUARD LOCATED BETWEEN THE FRAME RAILS
7. FIRECOM 5100D INTERCOM SYSTEM

NOTE:
LAP DOORS HAVE BEEN SHOWN IN HIDDEN LINES TO CLEARLY IDENTIFY THE EQUIPMENT IN EACH COMPARTMENT. DASHED LINES ON SIDES ARE DOORS IN OPEN POSITION

SIDE ROLL AND FRONTAL IMPACT PROTECTION

CLEAR DOOR WIDTH KEY

AMDOR ROLL UP DOORS:	-2 1/4"
GORTITE ROLL UP DOORS:	-2 1/2"
PIERCE DOUBLE LAP DOORS:	-4 1/4"
PIERCE LIFT-UP LAP DOORS:	-1 1/2"

(EX: 60"F-F - 2 1/4"= 57 3/4" CLEAR)
(F-F)= FRAME TO FRAME

REV	DATE	BY	CH
4	05DEC23	DHE	CDK
3	19SEP23	DHE	CDK
2	08SEP23	DHE	CDK
1	22AUG23	DHE	CDK

CHASSIS DATA
MAKE: PIERCE
MODEL: VXFR8420

Pierce MANUFACTURING INC.

TITLE: HEAVY DUTY RESCUE WALKIN/NON-WALKIN COMBO
FOR: LOUDOUN COUNTY LOUDOUN COUNTY, VA JOHN THOMPSON
DWG NO.: 38473AD-SH1

JOB NO.	38473 01&02
SCALE	1:24
DATE	
DRAWN BY	DHE
DATE	22MAR23
CHECKED BY	CDK
DATE	28MAR23
SHEET SIZE	D
SHEET NO.	1 OF 1

View File Created 06-DEC-2023 11:09:16