RIGHT SIDE COMPARTMENTS CONTAIN THE FOLLOWING:

COMPARTMENT RS1 CONTAINS:
- (2) STD DEPTH ADJ SLIDE OUT/TILT TRAYS
- (1) STD DEPTH FLOOR MOUNTED TRAY WITH SPECIAL SIDES/REAR WALLS
- (1) ELECTRIC CORD REEL WITH 150' OF 10/3 YELLOW CORD
-
-
-

COMPARTMENT RS2 CONTAINS:
- (1) STD DEPTH FLOOR MOUNTED TRAY
- (1) RACK FOR 12 SCBA BOTTLES
-
-

COMPARTMENT RS3 CONTAINS:
- (1) HORIZONTAL FLOOR EXTENSION
- (1) 2-WAY FLOOR MTD SLIDE OUT TRAY WITH (2) TOOLBOARDS
-
-
-
-

COMPARTMENT RS4 CONTAINS:
- (1) CAB LIFT CONTROLLER
- (1) HORIZONTAL FLOOR EXTENSION
- (2) 1/2 DEPTH ADJ SLIDE OUT/TILT TRAYS
- (1) 1/2 DEPTH FLOOR MTD SLIDE OUT TRAY
- (1) 15/20A,120V DUPLEX RECEPTACLE
-
-
-
-

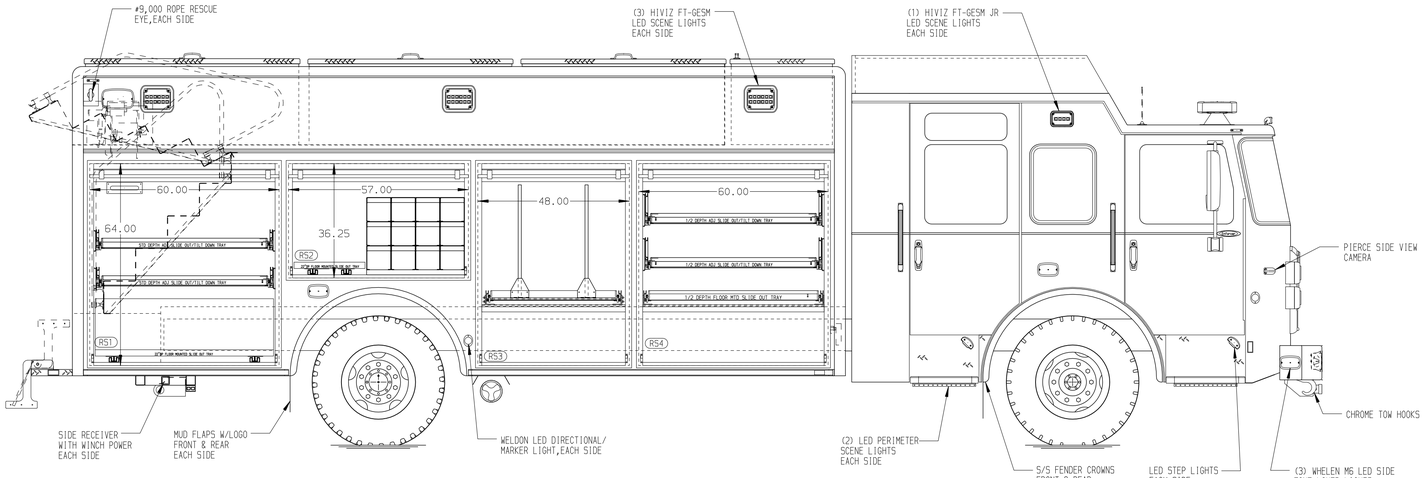


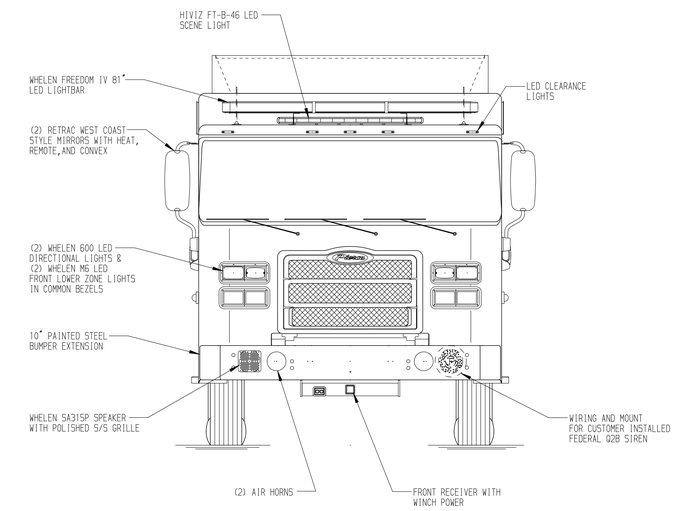


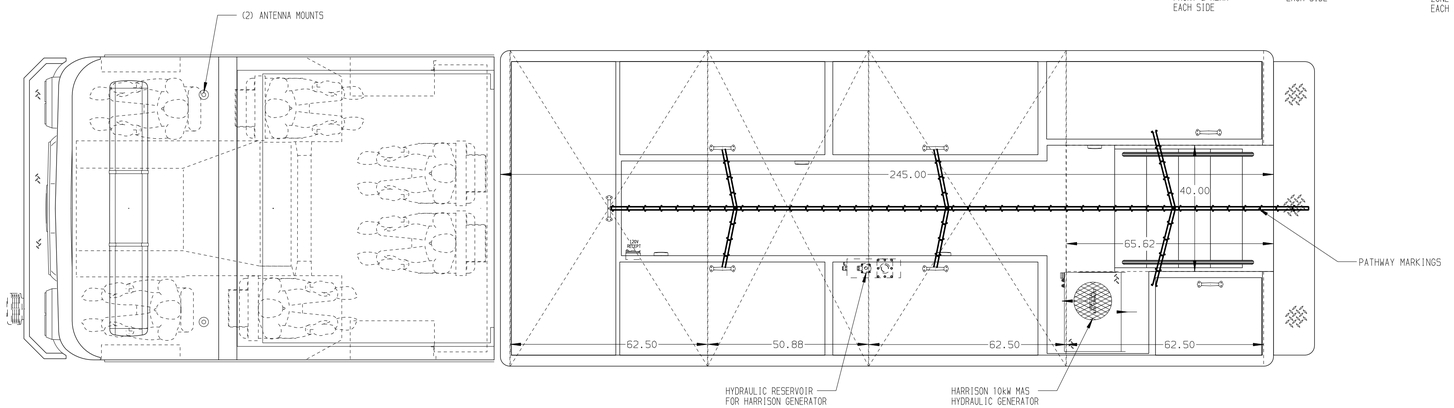


REAR COMPARTMENT CONTAINS THE FOLLOWING:

COMPARTMENT B2 CONTAINS:
-
-
-
-
-
-
-

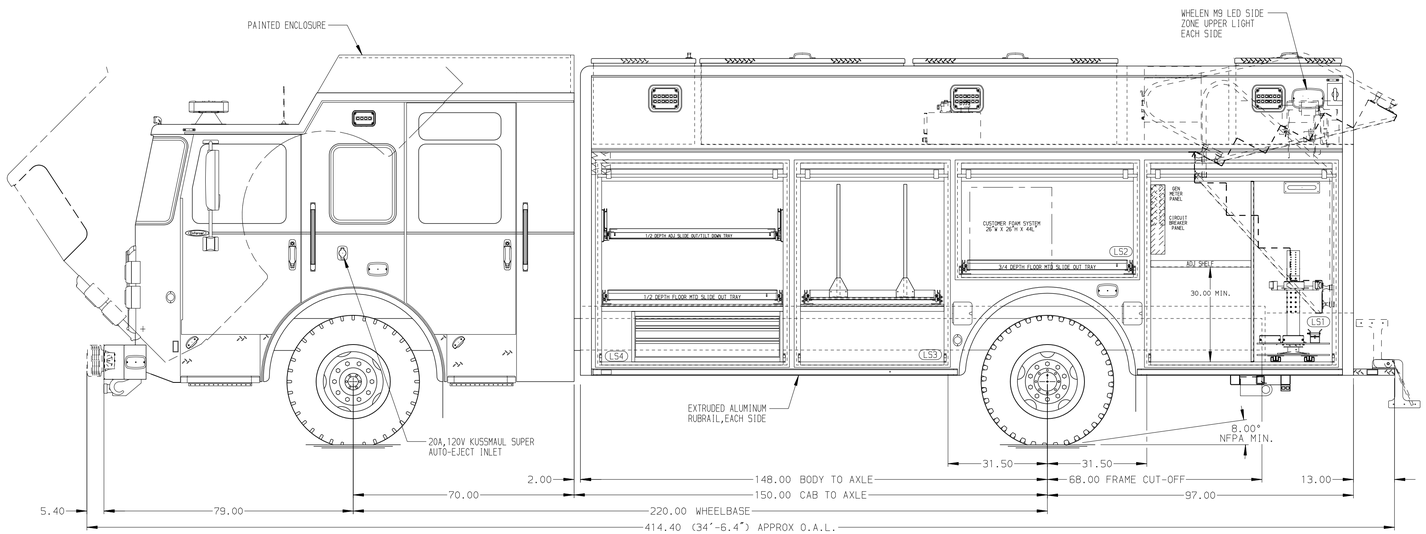


LEFT SIDE COMPARTMENTS CONTAIN THE FOLLOWING:

COMPARTMENT LS1 CONTAINS:
- (1) STD DEPTH FLAT TOP FLOOR MTD TRAY
- (1) VERTICAL COMPARTMENT DIVIDER
- (1) STD DEPTH ADJ SHELF
- (1) CIRCUIT BREAKER PANEL
- (1) GENERATOR METER PANEL
- (1) ELECTRIC CORD REEL WITH 150' OF 10/3 YELLOW CORD
- (1) 15/20A,120V DUPLEX RECEPTACLE
- (1) ZICO 4-PLACE TOOL HOLDER
-
-

COMPARTMENT LS2 CONTAINS:
- (1) 3/4 DEPTH FLOOR MTD SLIDE OUT TRAY
-
-
-

COMPARTMENT LS3 CONTAINS:
- (1) HORIZONTAL FLOOR EXTENSION
- (1) 2-WAY FLOOR MTD SLIDE OUT TRAY WITH (2) TOOLBOARDS
-
-

COMPARTMENT LS4 CONTAINS:
- (1) IOTA 75 AMP BATTERY CHARGER
- (1) HORIZONTAL FLOOR EXTENSION
- (1) 1/2 DEPTH ADJ SLIDE OUT/TILT TRAY
- (1) 1/2 DEPTH FLOOR MTD SLIDE OUT TRAY
- (1) 3-DRAWER C-TECH CABINET
- (1) 15/20A,120V DUPLEX RECEPTACLE
- (1) KUSSMAUL BRAKE SYSTEM COMPRESSOR
-
-

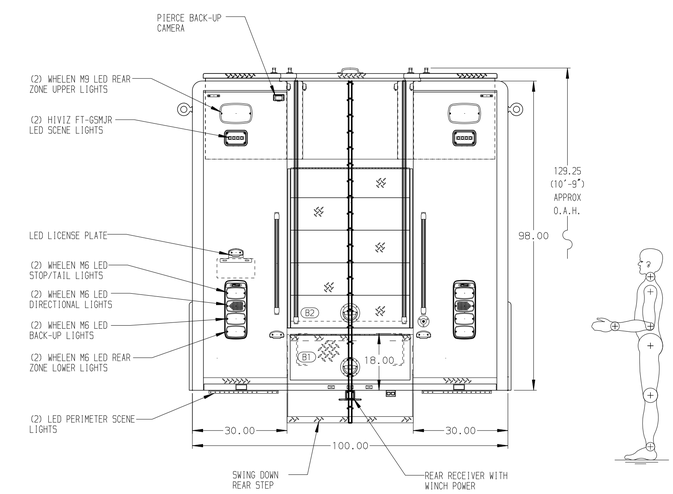


NOTE

DIMENSIONS SHOWN ARE APPROXIMATE AND ARE SUBJECT TO MINOR DEVIATIONS AS MAY OCCUR OR BE NECESSARY IN CONSTRUCTION.
MINOR DETAILS NOT SHOWN.

NOTES:
1. WARN #8,000 PORTABLE RECEIVER STYLE WINCH
2. FLOOR IN CAB AND CREW CAB TO BE PADDED RUBBER
3. BATTERY CHARGE INDICATOR LOCATED ON DRIVER'S SEAT RISER
4. S/S GUARDS ON ALL BODY ROLL-UP DOORS
5. PIERCE LED LIGHTS IN ALL BODY AND HATCH COMPARTMENTS
6. (2) FIRE VULCAN STREAMLIGHTS MOUNTED ON REAR WALL OF CREW CAB
7. MOUNTING PROVISIONS FOR A WILL-BURT NS3.0 NIGHTSCAN POWERLITE ON CREW CAB ROOF
8. (1) 15/20A,120V DUPLEX RECEPTACLE BEHIND THE OFFICER'S SEAT

**CLEAR DOOR WIDTH KEY**

| | |
|---|---|
| AMDOR ROLL UP DOORS: | -2 1/4" |
| GORTITE ROLL UP DOORS: | -2 1/2" |
| PIERCE DOUBLE LAP DOORS: | -4 1/4" |
| PIERCE LIFT-UP LAP DOORS: | -1 1/2" |

(EX: 60"F-F - 2 1/4"= 57 3/4" CLEAR)
(F-F)= FRAME TO FRAME

| REV | DATE | BY | CH |
|---|---|---|---|
| 1 | 10JAN24 | DHE | AZU |
| 2 | 18OCT23 | DHE | AZU |
| 3 | 26JUN23 | SHD | AZU |

CHASSIS DATA
MAKE: PIERCE
MODEL: EN7010

**Pierce MANUFACTURING INC.**

TITLE: HEAVY DUTY RESCUE NON-WALKIN
FOR: HOLDREGE RURAL FIRE DISTRICT BID #1090 — TODD CLYNE
DWG NO.: 38496AD

| | |
|---|---|
| JOB NO. | 38496 |
| SCALE | 1:24 |
| DATE | 24MAR23 |
| DRAWN BY | DHE |
| CHECKED BY | AZU |
| SHEET SIZE | D |
| SHEET NO. | 1 OF 1 |

View File Created 10-JAN-2024 10:48:51