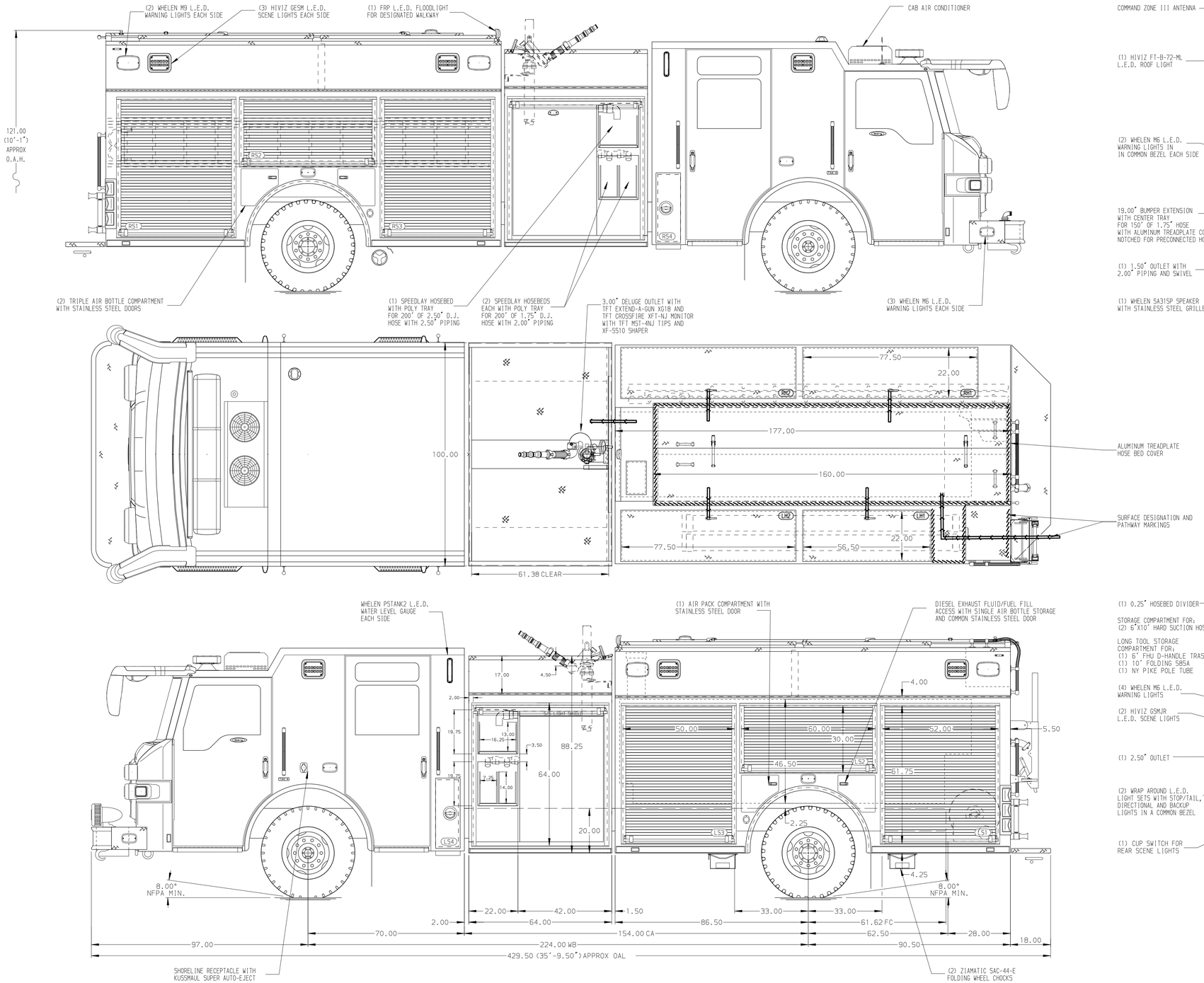

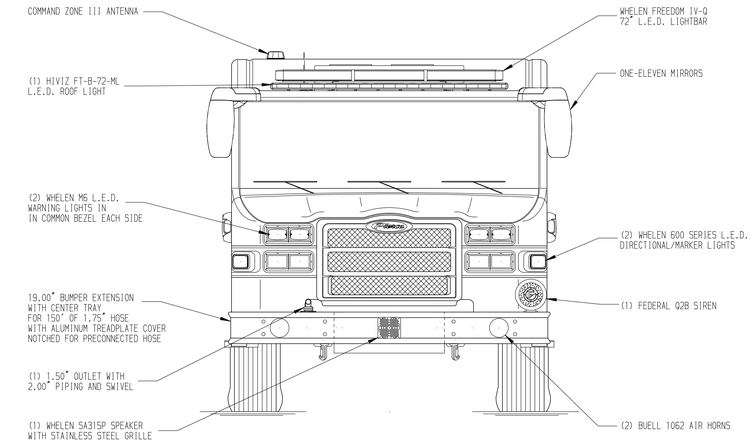

HOSEBED CAPACITIES

1 - 1000' OF 3.00" D.J. POLY HOSE
2 - 1000' OF 5.00" D.J. POLY HOSE

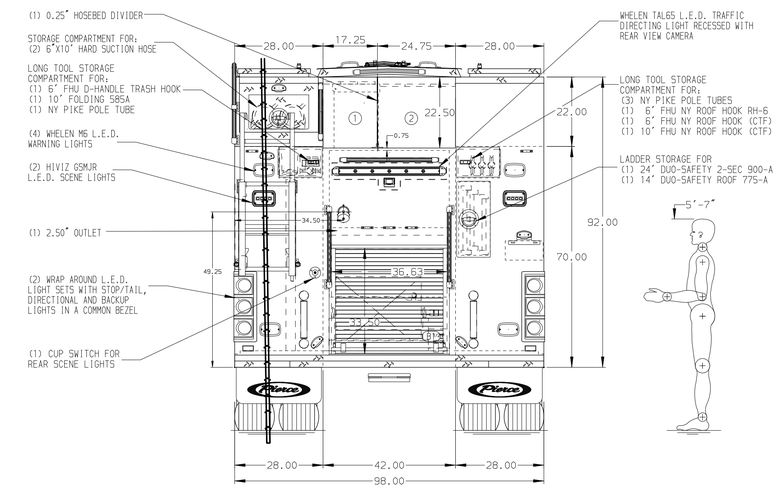

ALUMINUM BODY

FRONTAL IMPACT PROTECTION

NOTE

DIMENSIONS SHOWN ARE APPROXIMATE AND ARE SUBJECT TO MINOR DEVIATIONS AS MAY OCCUR OR BE NECESSARY IN CONSTRUCTION.
MINOR DETAILS NOT SHOWN.

1. BATTERY CHARGER/COMPRESSOR LOCATED PER SHOP ORDER
2. BATTERY CHARGE INDICATOR LOCATED NEAR DRIVER'S SEAT RISER WITH BRACKET
3. DUAL L.E.D. LIGHT STRIPS LOCATED IN HOSE BED
4. AIR INLET WITH DISCONNECT COUPLING LOCATED PER SHOP ORDER
5. ONE HANNAY BOOSTER REEL MODEL: (EF34-23-24) FOR 200' OF 1.00" HOSE LOCATED IN COMPARTMENT B1

REV	DATE	BY	CH
1	09NOV23	JJB	CHR
2	12OCT23	JJB	CHR
3	06OCT23	JJB	CHR
4	28JUN23	JJB	WKL

CHASSIS DATA
MAKE: PIERCE
MODEL: VELOCITY FR

Pierce MANUFACTURING INC.

TITLE: 1500-D-1000P, 1000 GALLON WATER TANK, 177" HDRP BODY LADDERS IN RS BODY, (3) SPEEDLAYS, DELUGE
FOR: WEBER FIRE DISTRICT FARR WEST, UTAH
DWG NO.: 38498AD-SH1

JOB NO.	38498
SCALE	1:24
DATE	
DRAWN BY	JJB 16JUN23
CHECKED BY	WKL 16JUN23
SHEET SIZE	D
SHEET NO.	1 OF 2

View File Created 09-NOV-2023 13:12:06