PUMPER

BODY
Medium Aluminum 2nd Gen Pumper

CHASSIS
Enforcer Chassis

CHASSIS

AXLE, FRONT, CUSTOM
19,500 lb TAK-4 Axle

AXLE, REAR
27,000 lb Meritor Axle

ENGINE
450 HP Cummins L9 Engine

TRANSMISSION
Allison 6th Gen, 3000 EVS P

BUMPER
22" Extended Painted Steel

CAB
6010 Enforcer Cab

BODY

WATER TANK
1000 Gallon Poly Water Tank

COMPT, PUMPER, REAR
37.75" FF RollUp Rear Compt

COMPT, PUMPER, LEFT SIDE
152" RollUp Full Height Front & Rear FDLER

COMPT, PUMPER, RIGHT SIDE
152" RollUp Full Height Front & Rear FDLER

FIRE SUPPRESSION

PUMPHOUSE
45" Control Zone Side Mount

PUMP
1500 GPM Waterous CSU

CROSSLAYS, 1.50"
(2) 1.50" Standard Capacity

CROSSLAYS, 2.50"
(1) 2.50" Standard Capacity

SPEEDLAYS
Speedlays Not Required

GENERATOR
Generator Not Required

Foam System
FoamPro 1600

Foam Cell
20 Gal Foam Cell Not Reduce

Side Roll and Frontal Impact Protection

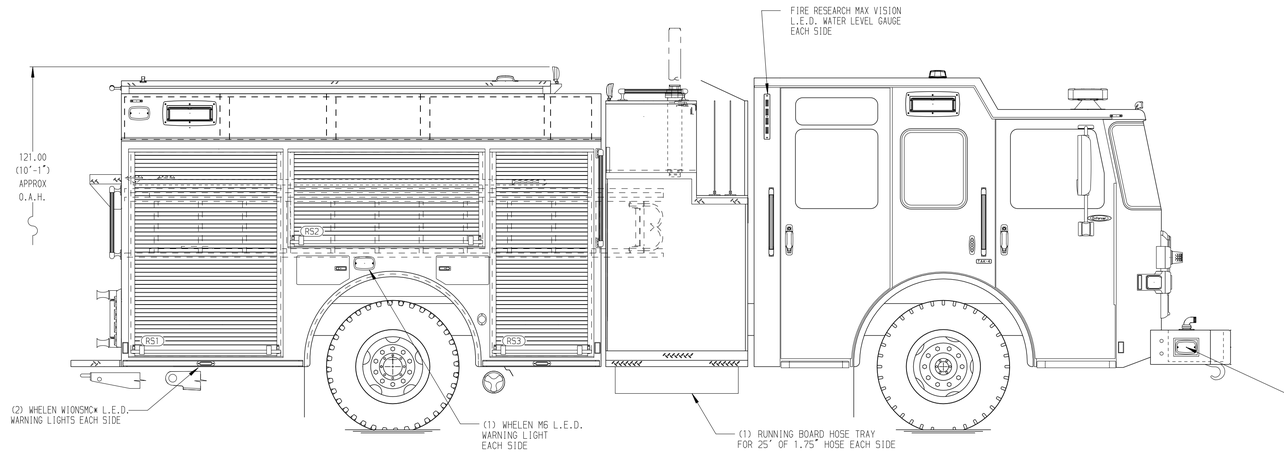

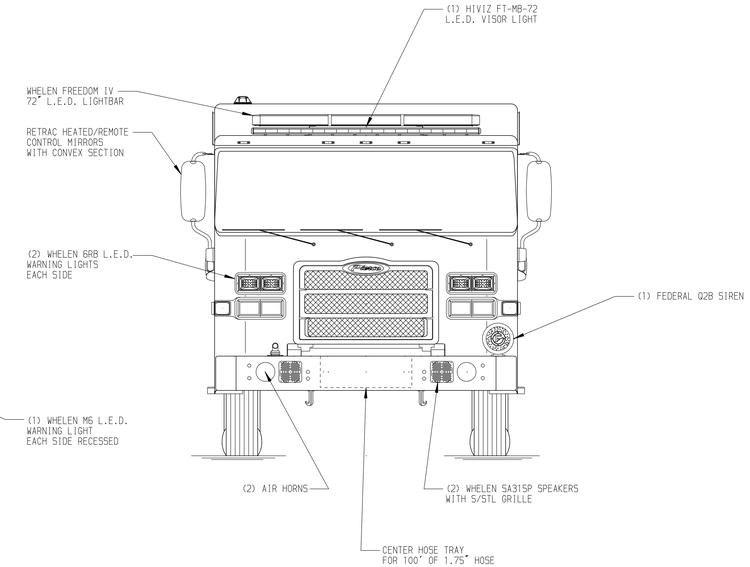

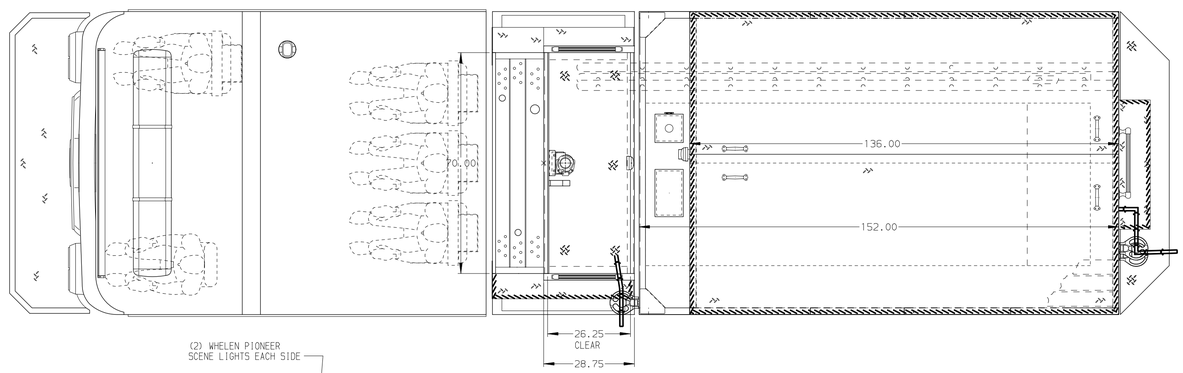

HOSEBED CAPACITY

BED 1
600' OF 3.00" D.J. POLY HOSE

BED 2
1000' OF 5.00" D.J. POLY HOSE

BED 3
400' OF 3.00" D.J. POLY HOSE

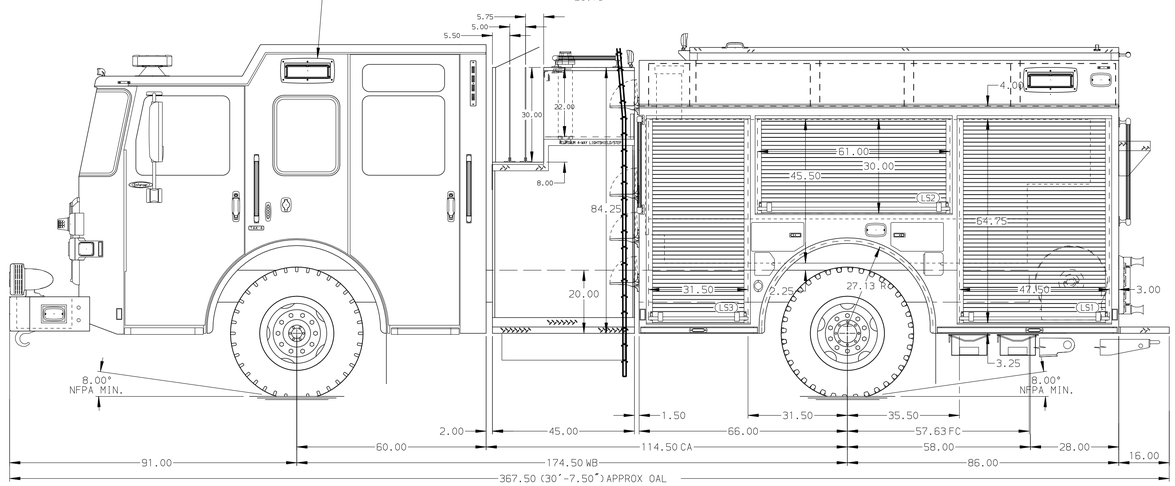

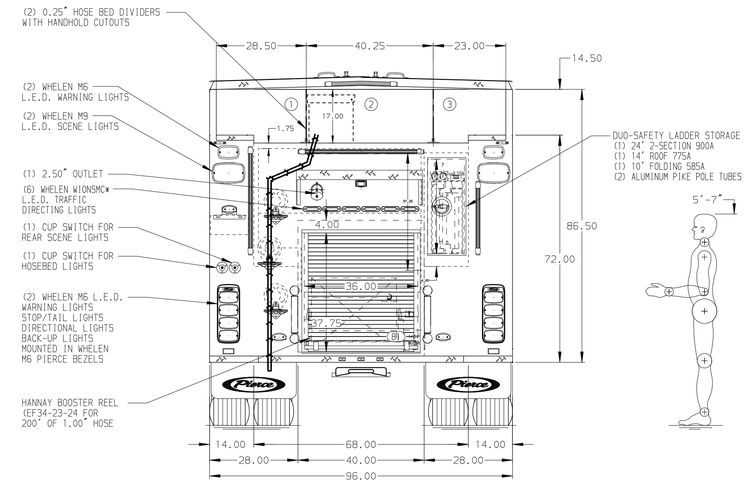

NOTE

DIMENSIONS SHOWN ARE APPROXIMATE AND ARE SUBJECT TO MINOR DEVIATIONS AS MAY OCCUR OR BE NECESSARY IN CONSTRUCTION.
MINOR DETAILS NOT SHOWN.

1. ONE 1.50 OUTLET WITH 2.00 PIPING AND SWIVEL LOCATED ON TOP BUMPER RIGHT SIDE
2. SHORELINE RECEPTACLE WITH KUSSMAUL SUPER AUTO-EJECT LOCATED ON DRIVER SIDE OF THE CAB
3. AIR INLET WITH DISCONNECT COUPLING IN THE DRIVER SIDE STEPWELL
4. BATTERY CHARGER LOCATED PER ORDER
5. BATTERY CHARGE INDICATOR LOCATED ON THE DRIVER SIDE SEAT RISER
6. SIX ADJUSTABLE SHELVES LOCATED PER ORDER
7. JUMPER STUDS DRIVER SIDE CAB STEP

CUSTOMER APPROVAL

APPROVED BY: _____

DATE: _____

REV	DATE	BY	CH
-	-	-	-

CHASSIS DATA

MAKE: PIERCE

MODEL: ENFORCER

Pierce MANUFACTURING INC.

TITLE: Pierce Pumper Approval Drawing
-

FOR: Indian Creek VFD
-

DWG NO.: 38501AD

JOB NO.	38501
SCALE	1:24
DATE	30NOV22
DRAWN BY	MMF
CHECKED BY	COL
01DEC22	
SHEET SIZE	D
SHEET NO.	1 OF 1

View File Created 01-DEC-2022 10:49:53