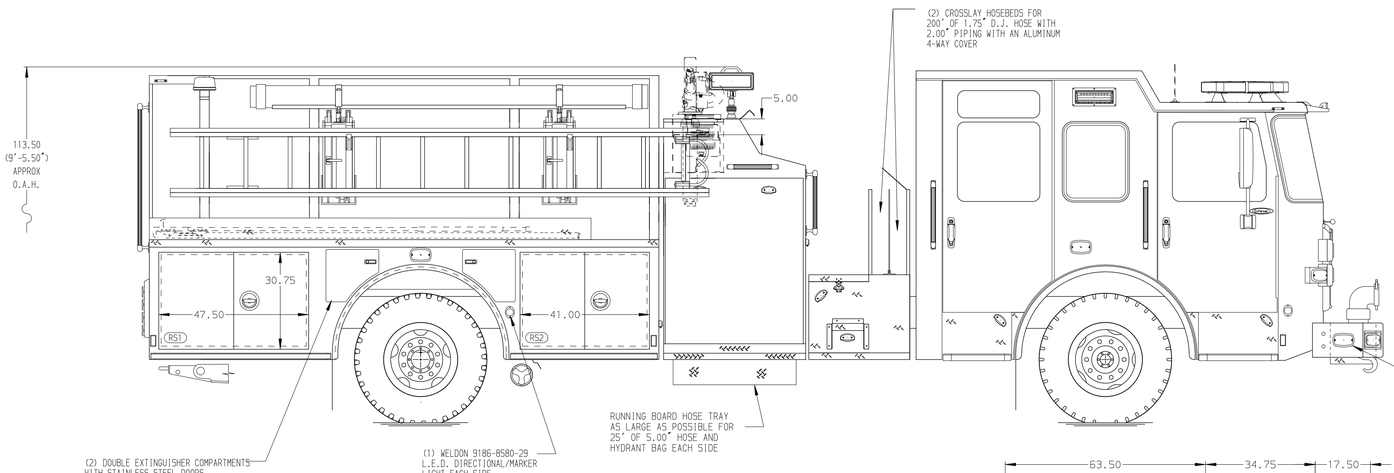

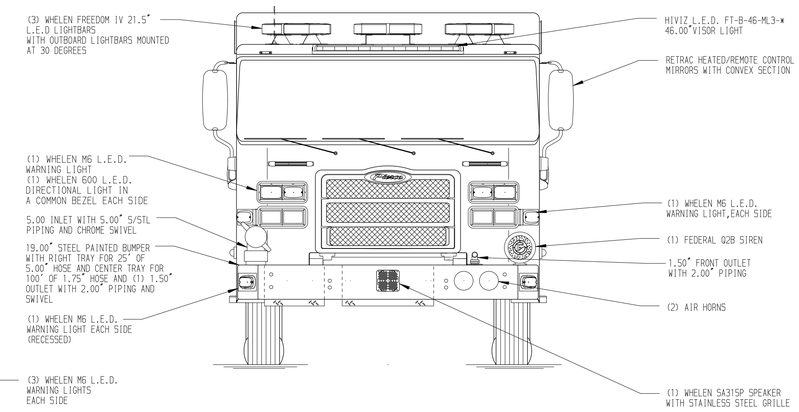

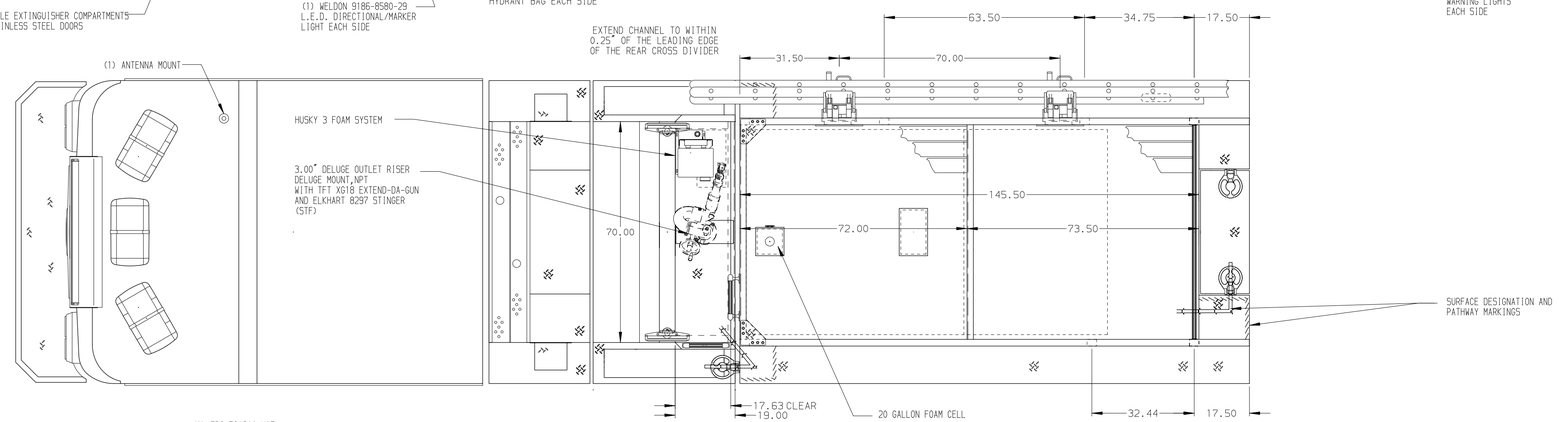

HOSEBED CAPACITIES

1. 200' OF 2.50" D.J. HOSE
2. 400' OF 3.00" D.J. HOSE
3. 1000' OF 5.00" D.J. HOSE
4. 200' OF 2.50" D.J. HOSE

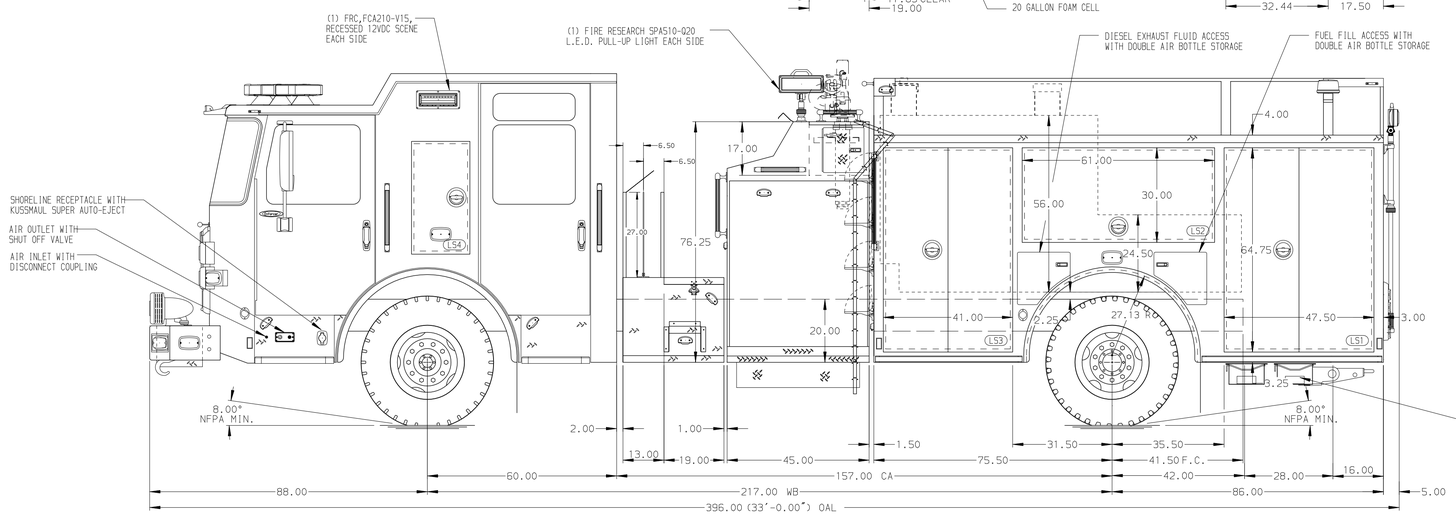

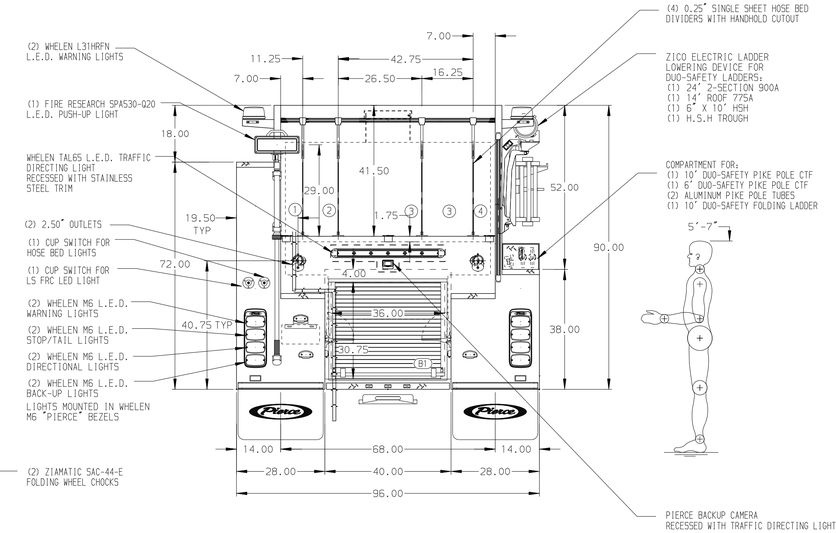

ALUMINUM BODY | MAXIMUM O.A.L. 396.00 | MAXIMUM O.A.H. 115.00"

NOTE

DIMENSIONS SHOWN ARE APPROXIMATE AND ARE SUBJECT TO MINOR DEVIATIONS AS MAY OCCUR OR BE NECESSARY IN CONSTRUCTION.
MINOR DETAILS NOT SHOWN.

1. BATTERY CHARGER LOCATED IN THE BODY PER SHOP ORDER
2. BATTERY CHARGER INDICATOR LOCATED IN THE CAB PER SHOP ORDER
3. DRIP PAN GUARD LOCATED PER SHOP ORDER
4. SIX FULL WIDTH/DEPTH ADJUSTABLE SHELVES LOCATED PER SHOP ORDER
5. THREE SLIDE-OUT TRAYS LOCATED PER SHOP ORDER
6. TWO FLOOR MOUNTED SLIDE-OUT TRAYS LOCATED PER SHOP ORDER
7. ONE 120V NEMA DUPLEX RECEPTACLE LOCATED IN THE CAB PER SHOP ORDER
8. TWO 120V NEMA DUPLEX RECEPTACLES LOCATED IN THE BODY PER SHOP ORDER

REV	DATE	BY	CH
3	19OCT23	LST	CLM
2	11AUG23	LST	SJS

CHASSIS DATA
MAKE: PIERCE
MODEL: ENFORCER

Pierce MANUFACTURING INC.

TITLE: 1500-D-1000P, 980 GAL WATER W/20 GAL FOAM, 161" BODY (2) CROSSLAYS, ZICO QUIC-LIFT, DELUGE, HUSKY 3
FOR: TERRE HAUTE FIRE DEPARTMENT TERRE HAUTE, INDIANA
DWG NO.: 38544AD

JOB NO.	38544
SCALE	1:24
DATE	
DRAWN BY	LST 03AUG23
CHECKED BY	SJS 08AUG23
SHEET SIZE	D
SHEET NO.	1 OF 1

View File Created 20-OCT-2023 07:42:56