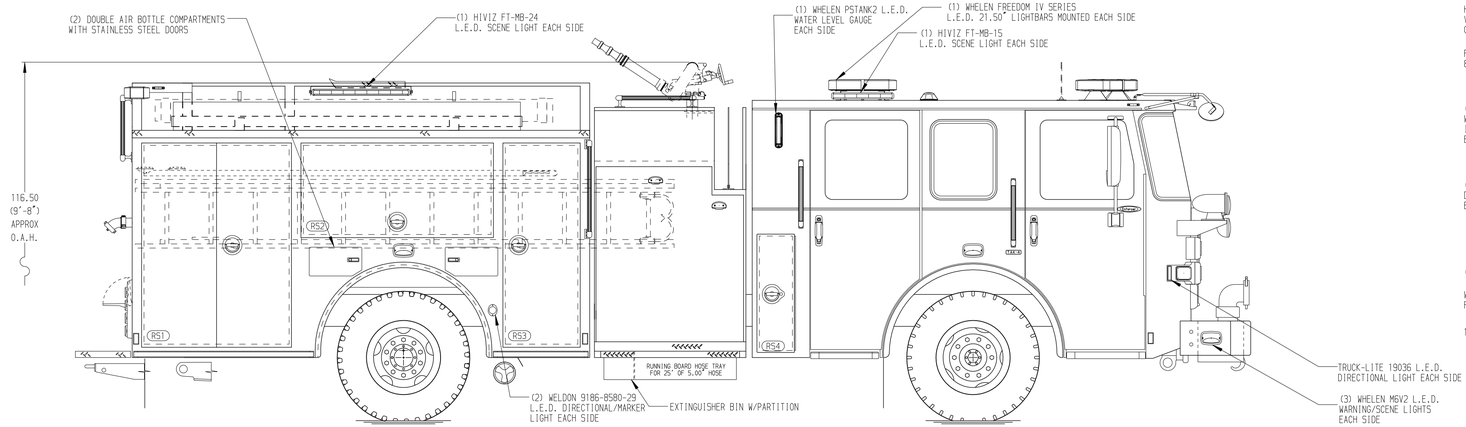

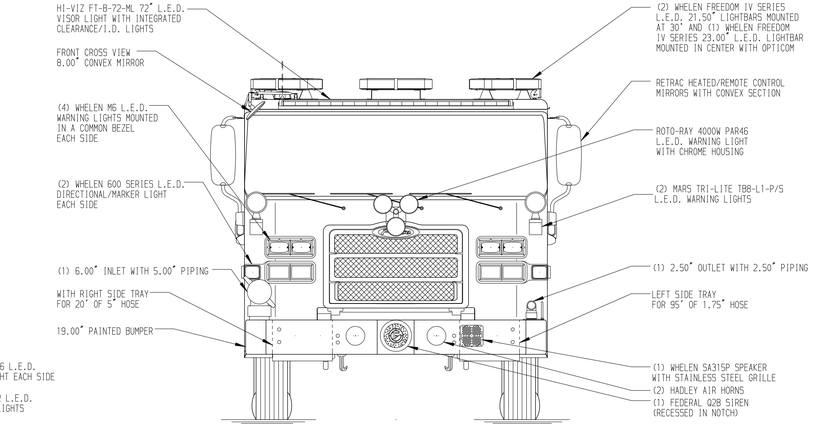

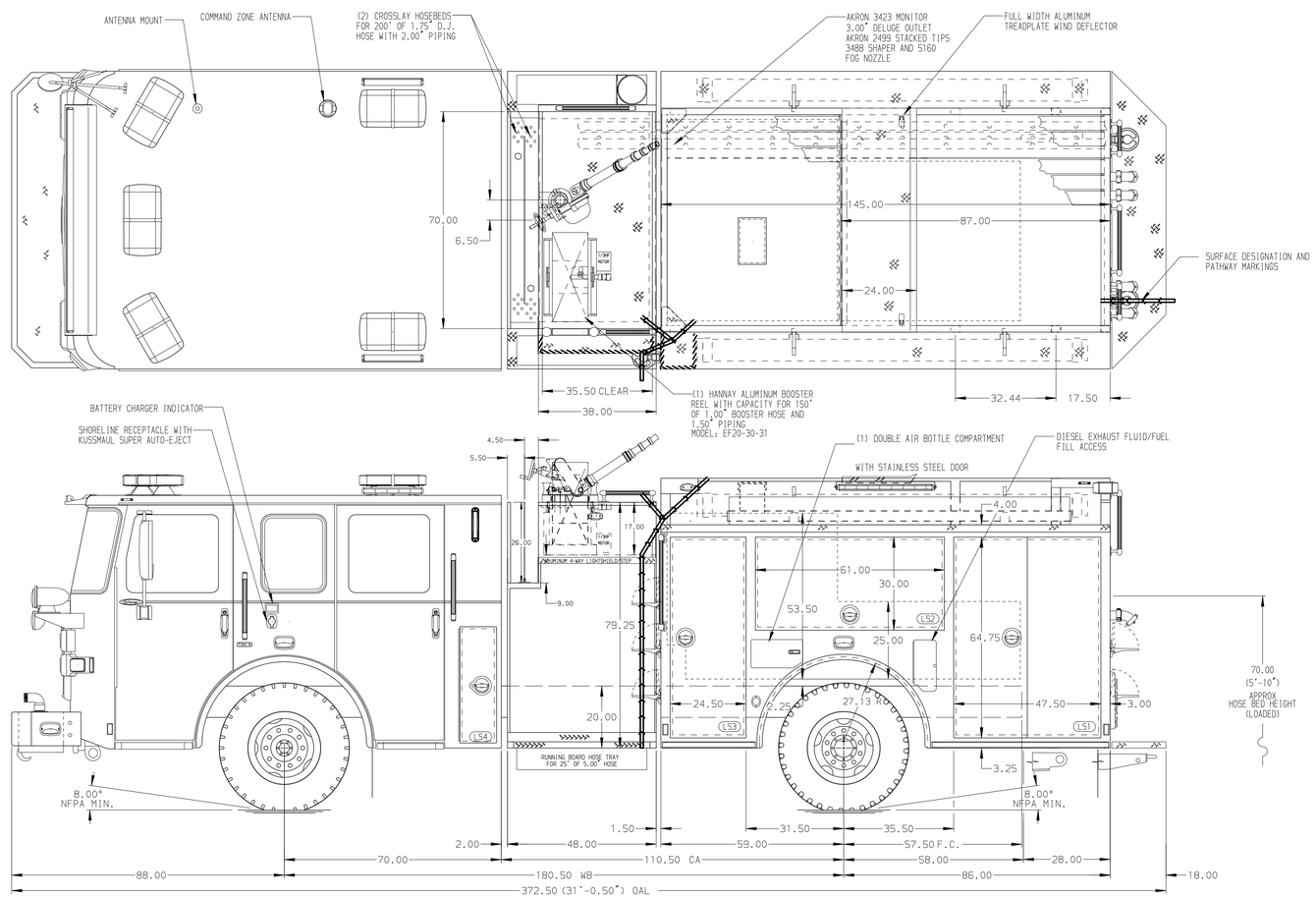

HOSEBED CAPACITIES

1. 300' OF 1.50" MERCEDES KRAKEN EXO
2. 300' OF 2.00" MERCEDES KRAKEN SUPER
3. 1000' OF 4.00" MERCEDES MEGA FLOW HOSE
4. 500' OF 3.00" MERCEDES MTFS-800-DP
5. 400' OF 2.00" MERCEDES KRAKEN SUPER

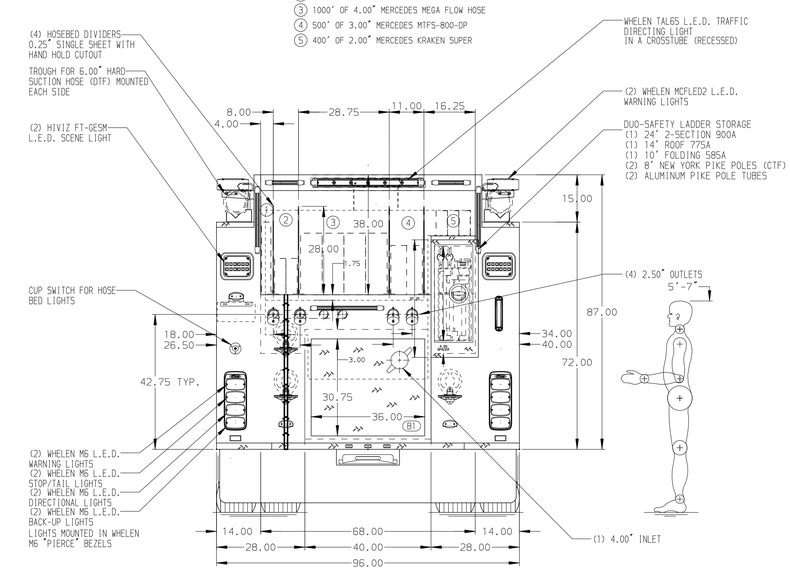

ALUMINUM BODY

SIDE ROLL AND FRONTAL IMPACT PROTECTION

NOTE

DIMENSIONS SHOWN ARE APPROXIMATE AND ARE SUBJECT TO MINOR DEVIATIONS AS MAY OCCUR OR BE NECESSARY IN CONSTRUCTION.
MINOR DETAILS NOT SHOWN.

1. BATTERY CHARGER/COMPRESSOR LOCATED IN COMPARTMENTS PER ORDER
2. DUAL L.E.D. LIGHT STRIPS LOCATED IN HOSE BED
3. L.E.D. LIGHT STRIP LOCATED ON THE FRONT OF THE HOSEBED
4. FOUR 120V DUPLEX RECEPTACLES LOCATED PER ORDER

REV	DATE	BY	CH
F	23APR24	JAM	ZWE
E	19DEC23	JAM	ZWE
D	15NOV23	JAM	ZWE
C	09NOV23	JAM	ZWE
B	02NOV23	JAM	GKH

CHASSIS DATA
MAKE: PIERCE
MODEL: ENFORCER

Pierce MANUFACTURING INC.

TITLE: 1500-D-750P, 750 GAL OF WATER
145" FH FDLER,LDRS. BTWN. TANK & S.SHEET, (2) X-LAYS

FOR: HALFWAY VOLUNTEER FIRE COMPANY
HAGERSTOWN, MARYLAND

DWG NO. 38652AD

JOB NO.	38652
SCALE 1:24	DATE
DRAWN BY JAM	26JUL23
CHECKED BY CDU	07AUG23
SHEET SIZE D	SHEET NO. 1 OF 1

View File Created 23-APR-2024 11:34:24