Pumper, PUC

BODY
Pumper, PUC, Aluminum

CHASSIS
Enforcer Chassis, PUC

CHASSIS

AXLE,FRONT,CUSTOM
19,500 lb TAK-4 Axle

AXLE,REAR
27,000 lb Meritor Axle

ENGINE
450 HP Cummins L9 Engine

TRANSMISSION
Allison 6th Gen, 3000 EVS P

BUMPER
22" Extended Painted Steel

CAB
7010 Enforcer Cab, PUC

BODY

WATER TANK
730 Gallon Poly Water Tank

COMPT,PUMPER,REAR
33.50" FF Rollup Rear Compt w/Tailboard, PUC

COMPT,PUMPER,LEFT SIDE
189" Rollup Full Height & Depth Front & Rear, PUC

COMPT,PUMPER,RIGHT SIDE
189" Rollup Full Height & Depth Front & Rear, PUC

FIRE SUPPRESSION

PUMPHOUSE
Control Zone, PUC

PUMP
1500 GPM Pierce PUC

CROSSLAYS,1.50"
(2) 1.50", Poly Trays, 200'

CROSSLAYS,2.50"
2.50", Not Required

GENERATOR
Generator Not Required

Foam System
Husky 3 Single Agent Foam System

Foam Cell
20 Gallon Foam Cell, Reduced Water, PUC

Side Roll and Frontal Impact Protection

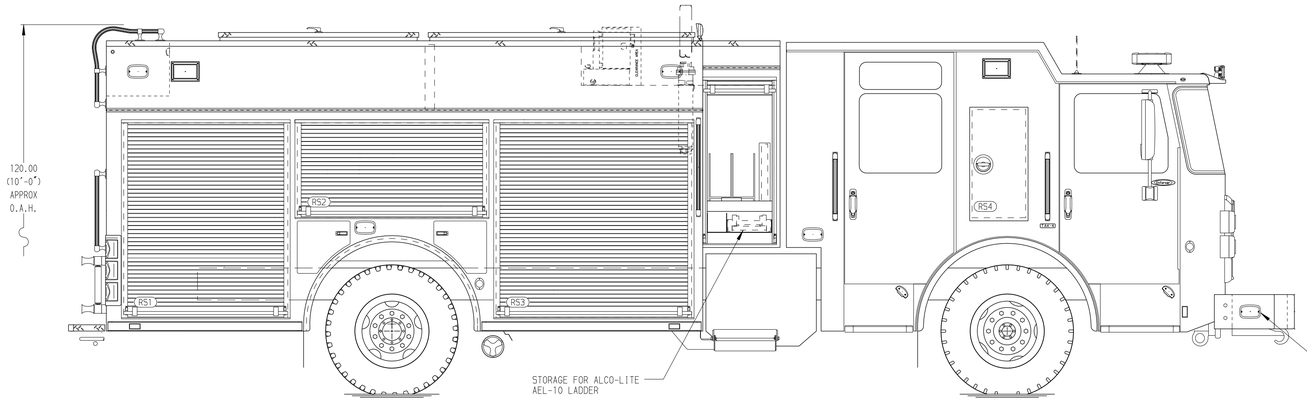

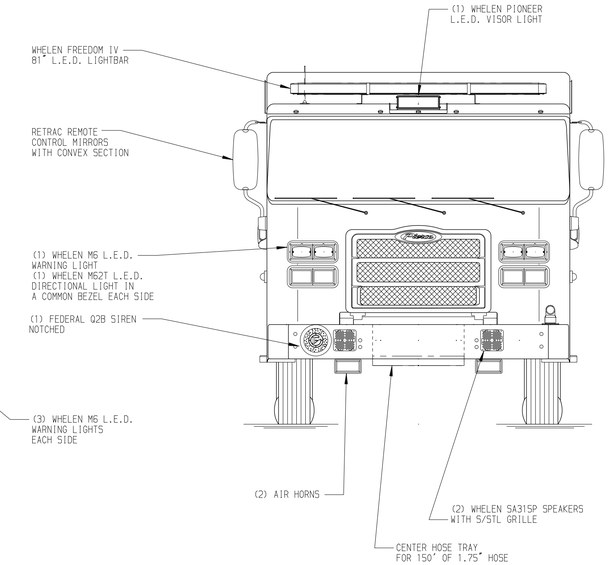

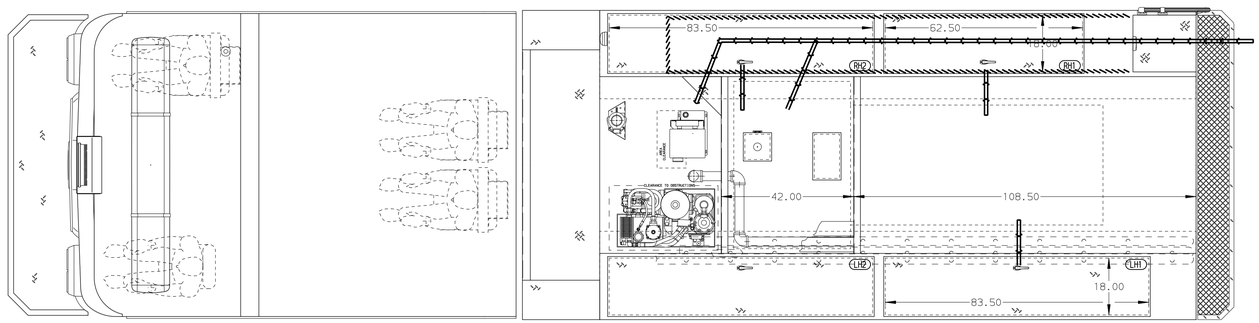

HOSEBED CAPACITY

BED 1
400' OF 2.50" D.J. POLY HOSE

BED 2
1200' OF 5.00" D.J. POLY HOSE

BED 3
400' OF 2.50" D.J. POLY HOSE

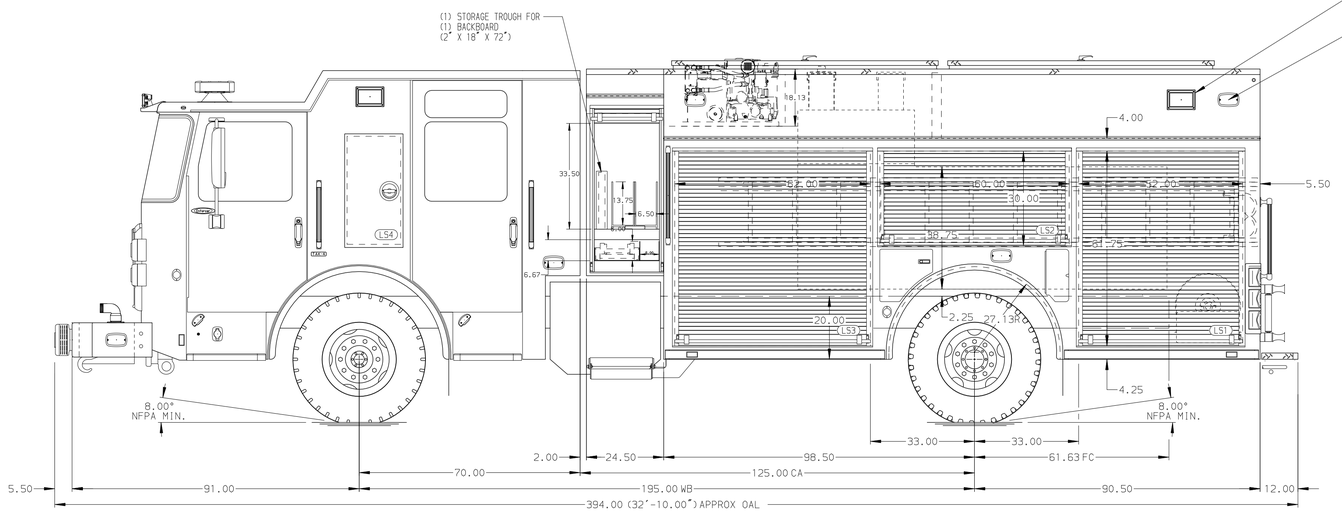

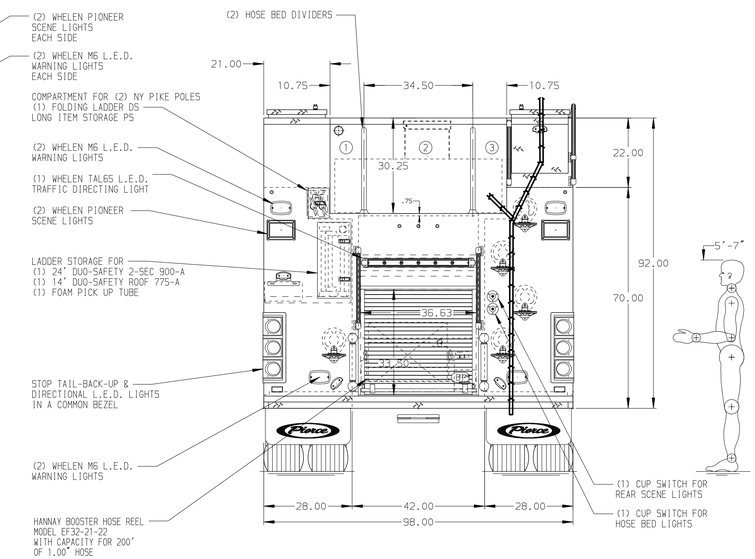

Pierce MANUFACTURING INC.

JOB NO.	38657
SCALE	1:24
DATE	
TITLE	Pierce Pumper Approval Drawing
	-
FOR	Marshall Fire Department
	-
DRAWN BY	MMF
CHECKED BY	AMI
DATE	31JUL23
	02AUG23
DWG NO.	38657AD
SHEET SIZE	D
SHEET NO.	1 OF 1

NOTE

DIMENSIONS SHOWN ARE APPROXIMATE AND ARE SUBJECT TO MINOR DEVIATIONS AS MAY OCCUR OR BE NECESSARY IN CONSTRUCTION.
MINOR DETAILS NOT SHOWN.

1. ONE 2.50 OUTLET WITH 2.50 PIPING AND SWIVEL LOCATED ON TOP BUMPER RIGHT SIDE
2. SHORELINE RECEPTACLE WITH KUSSMAUL SUPER AUTO-EJECT LOCATED IN DRIVER SIDE STEPWELL
3. AIR INLET WITH DISCONNECT COUPLING IN THE DRIVER SIDE STEPWELL
4. BATTERY CHARGER LOCATED PER ORDER
5. BATTERY CHARGER INDICATOR LOCATED PER SHOP ORDER
6. NINE ADJUSTABLE SHELVES LOCATED PER ORDER
7. TWO FLOOR MOUNTED SLIDE-OUT TRAY LOCATED PER ORDER
8. ONE TILT/SLIDE-OUT TOOLBOARD LOCATED PER SHOP ORDER
9. ONE SWING-OUT TOOLBOARD LOCATED PER SHOP ORDER
10. ONE TOOL DRAWER CABINET LOCATED PER SHOP ORDER
11. PEGBOARD ON BACK WALL IN COMPARTMENT PER SHOP ORDER
12. ONE VERTICAL PARTITION LOCATED PER SHOP ORDER

REV	DATE	BY	CH
V	11DEC23	MMF	CHR
B	27OCT23	MMF	COS
V	11OCT23	MMF	COS

CHASSIS DATA
MAKE: PIERCE
MODEL: ENFORCER

View File Created 13-DEC-2023 12:10:27