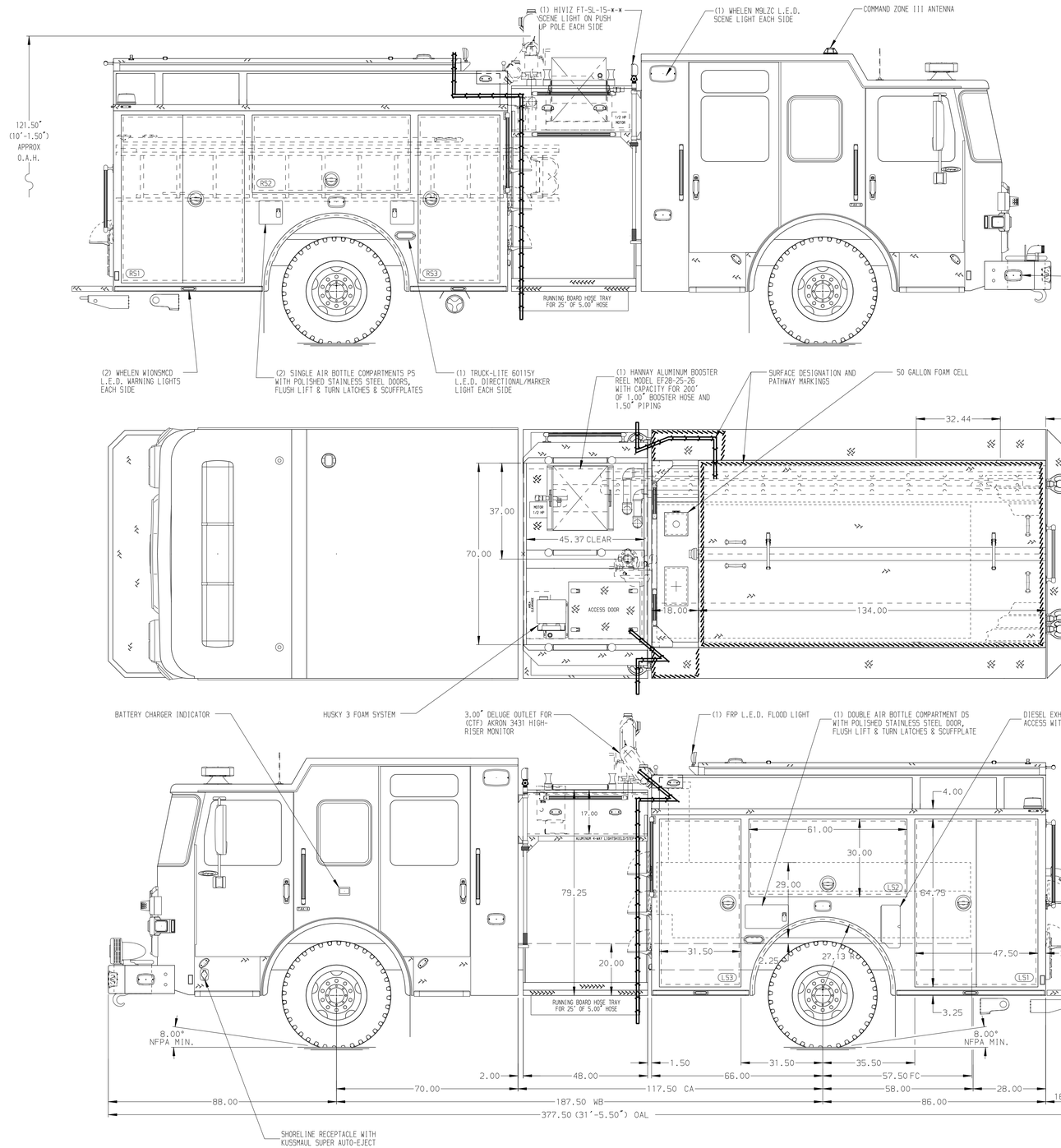

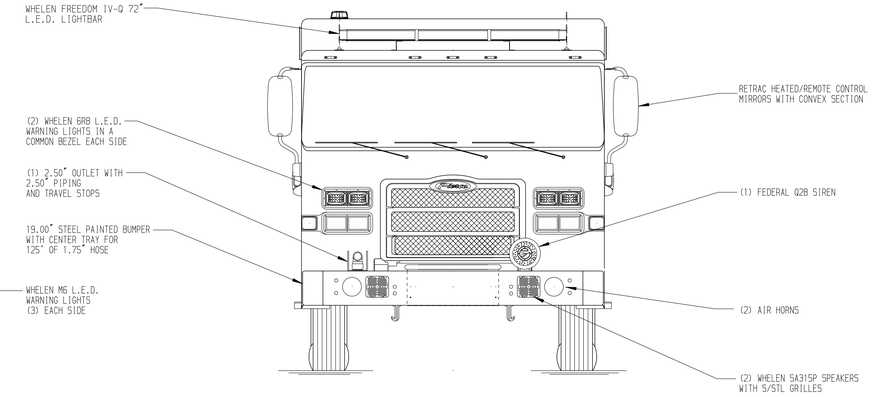

HOSEBED CAPACITIES

1. - 200' OF 1.75" KEY FDNY HOSE
2. - 200' OF 1.75" KEY FDNY HOSE
3. - 500' OF 2.50" D.J. POLY HOSE
4. - 500' OF 2.50" D.J. POLY HOSE
5. - 1000' OF 5.00" D.J. POLY HOSE
6. - 200' OF 1.75" KEY FDNY HOSE
7. - 200' OF 2.50" D.J. POLY HOSE

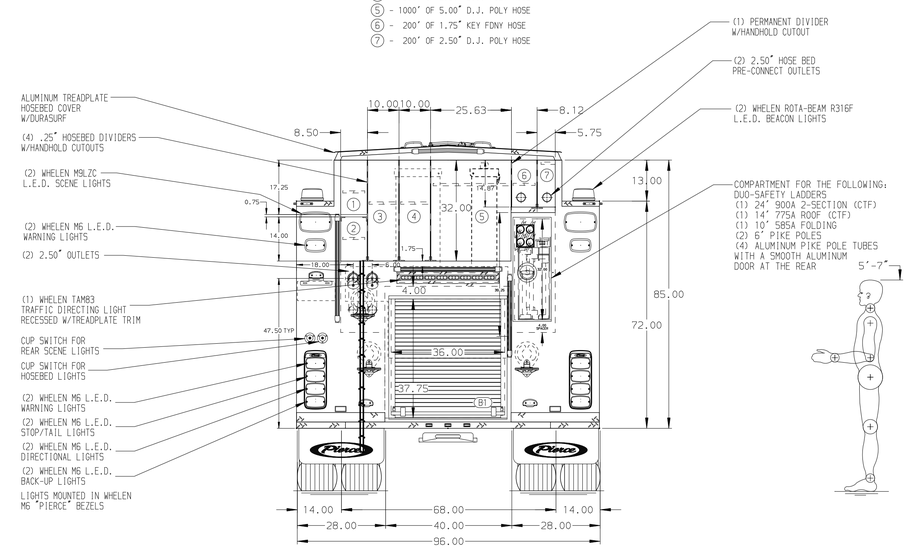

ALUMINUM BODY

SIDE ROLL AND FRONTAL IMPACT PROTECTION

NOTE

DIMENSIONS SHOWN ARE APPROXIMATE AND ARE SUBJECT TO MINOR DEVIATIONS AS MAY OCCUR OR BE NECESSARY IN CONSTRUCTION.
MINOR DETAILS NOT SHOWN.

1. BATTERY CHARGER LOCATED PER SHOP ORDER
2. S/STL SCUFFPLATE IN COMPARTMENTS LOCATED PER SHOP ORDER
3. S/STL PROTECTIVE GUARD FOR ROLL-UP DOOR LOCATED PER SHOP ORDER
4. NINE ADJUSTABLE FULL WIDTH/DEPTH SHELVES LOCATED PER SHOP ORDER
5. ONE AJUSTABLE SLIDE-OUT TRAY LOCATED PER SHOP ORDER
6. ONE SWING-OUT ALUMINUM TOOL BOARD LOCATED PER SHOP ORDER
7. RETENTION NETTING LOCATED PER SHOP ORDER
8. TWO ALUMINUM MOUNTING PLATES LOCATED PER SHOP ORDER
9. AUTOMATIC TIRE CHAINS TO BE PROVIDED AT REAR
10. WHEEL CHOCKS & MOUNTING BRACKETS TO BE PROVIDED BY DEALER
11. AIR INLET/OUTLET WITH DISCONNECT FITTING LOCATED PER SHOP ORDER

REV	DATE	BY	CH
D	06MAR24	JJB	JGO
C	16JAN24	JJB	AST
B	28NOV23	KLE	JGO
A	19OCT23	CDU	CZA

CHASSIS DATA
MAKE: PIERCE
MODEL: ENFORCER

Pierce MANUFACTURING INC.

TITLE: 1500-D-550P, 500G WATER, 50G FOAM, 152" FDLER PUMPER LADDERS BTWN TANK & SS, DELUGE, 48" SIDE CONTROL
FOR: HIGH POINT FIRE DEPARTMENT, HIGH POINT, NORTH CAROLINA
DWG NO.: 38663AD

JOB NO.	38663
SCALE	1:24
DATE	
DRAWN BY	JJB 13SEP23
CHECKED BY	CDU 15SEP23
SHEET SIZE	D
SHEET NO.	1 OF 1

View File Created 13-MAR-2024 10:21:01