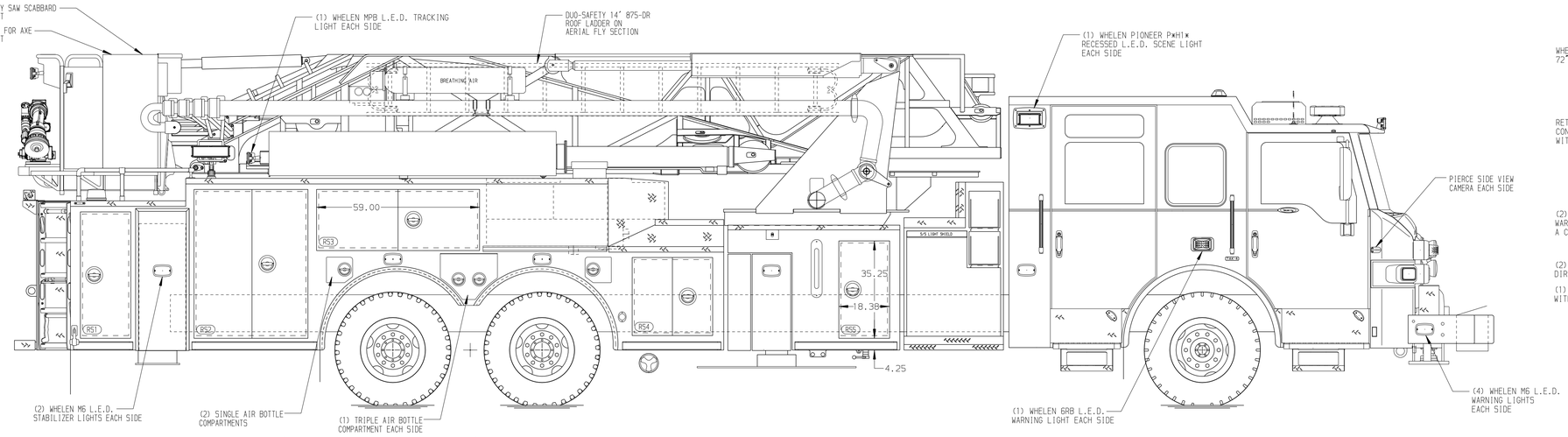

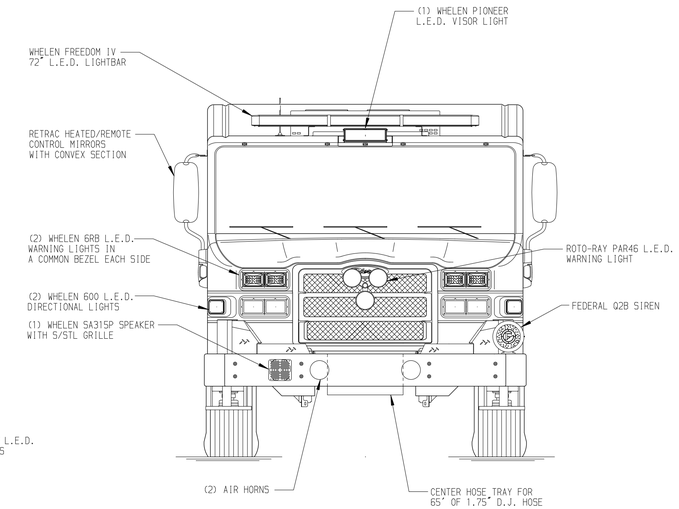

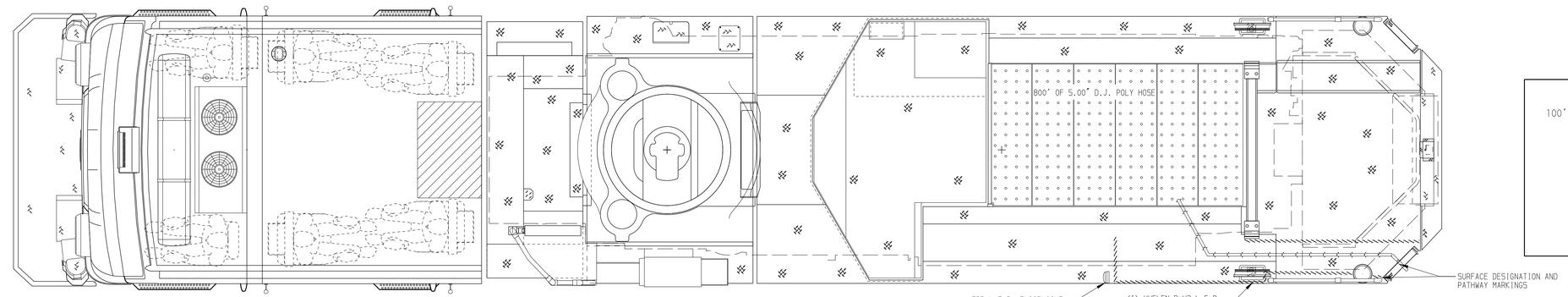

BODY	WATER TANK
100' Ascendant Aerial Tower Alum Body	300 Gallon Poly Water Tank
COMPT,LEFT SIDE	Foam System
Full Height Lap Doors	Foam System Not Required
COMPT,RIGHT SIDE	Foam Cell
Full Height Lap Doors	Foam Cell Not Required

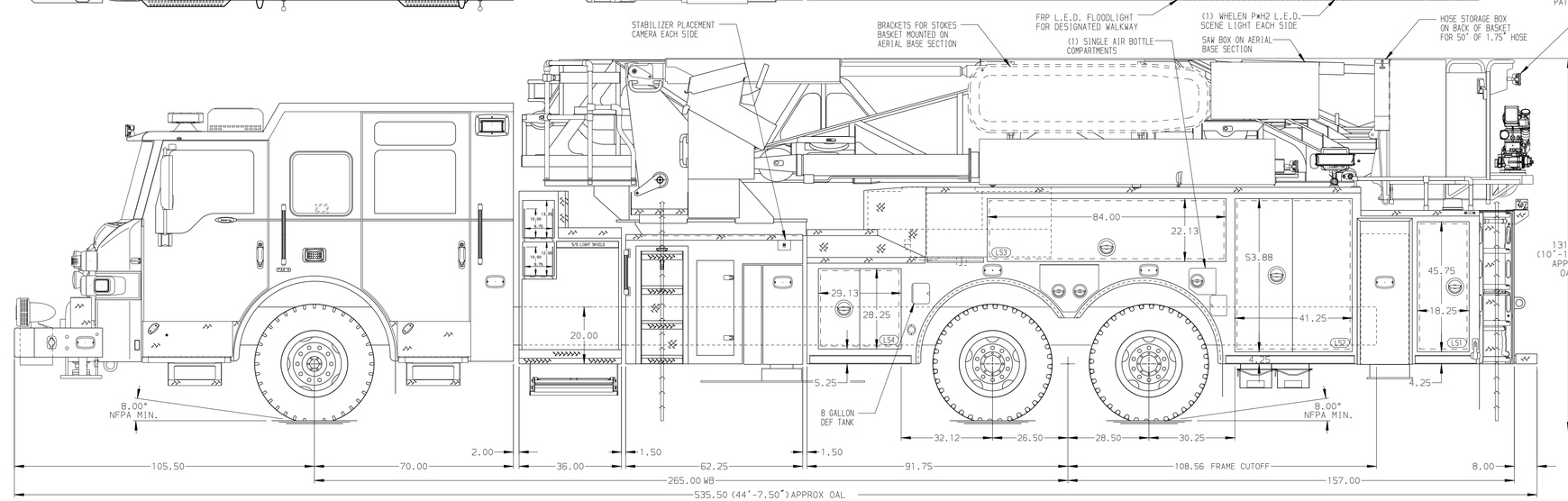

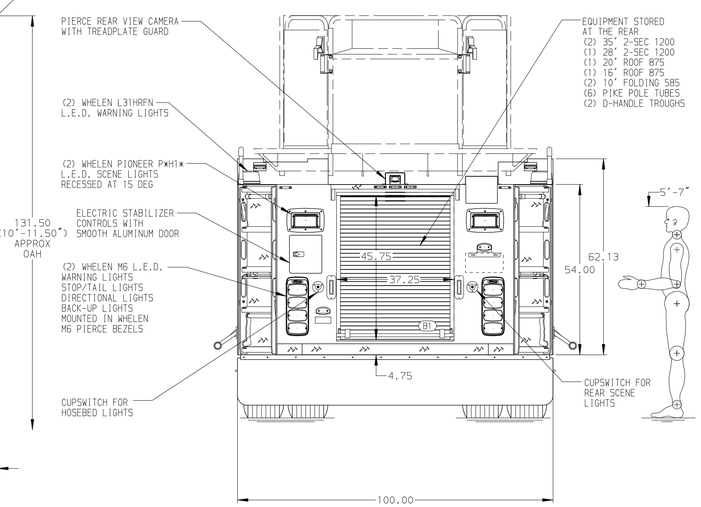

CHASSIS	CAB	AXLE,FRONT,CUSTOM	TRANSMISSION	PUMPHOUSE	CROSSLAYS,1.50"	SPEEDLAYS	SAFETY
Velocity Chassis (Big Block)	7010 Velocity FR Cab	24,000 Lb TAK-4 Axle	Allison 6th Gen, 4500 EVS P	36" Control Zone Side Mount	(2) 1.50",With Trays,200'	Speedlays Not Required	Side Roll and Frontal Impact Protection
ENGINE	BUMPER	AXLE,REAR		PUMP	CROSSLAYS,2.50"	GENERATOR	
605 HP Cummins X15 Engine	27" Painted Aluminum	54,000 Lb Meritor Axle		2000 GPM Waterous S100	2.50" Crosslay Not Required	Generator Not Required	

NOTE

DIMENSIONS SHOWN ARE APPROXIMATE AND ARE SUBJECT TO MINOR DEVIATIONS AS MAY OCCUR OR BE NECESSARY IN CONSTRUCTION.
MINOR DETAILS NOT SHOWN.

1. SHORELINE RECEPTACLE WITH KUSSMAUL SUPER AUTO-EJECT LOCATED ON DRIVER SIDE BUMPER EXTENSION
2. AIR INLET WITH DISCONNECT COUPLING IN THE DRIVER SIDE STEPWELL
3. BATTERY CHARGER LOCATED PER ORDER
4. BATTERY CHARGE INDICATOR LOCATED IN DRIVER SIDE CAB WINDOW
5. DC POWER TO AERIAL TIP
6. TWO WHELEN PSL2BX L.E.D. LIGHTS UNDER BASKET CORNER STEPS
7. 3-in-1 LYFECOMBO BRACKETS AT AERIAL BASKET
8. NON-RAISED AERIAL PEDESTAL
9. FIRE RESEARCH 2-WAY INTERCOM

REV	DATE	BY	CH	
E	15FEB24	ANZ	JJR	CHASSIS DATA
D	27NOV23	ANZ	JJR	
C	06NOV23	ANZ	JJR	MAKE
B	21AUG23	ANZ	JJR	PIERCE
A	14JUL23	ANZ	JJR	MODEL
				VELOCITY

Pierce MANUFACTURING INC.

TITLE: 100' AERIAL ASCENDANT TOWER AND BODY ASSEMBLY
300 GALLON WATER TANK

FOR: ST. JOHNS COUNTY FIRE RESCUE
ST AUGUSTINE, FL

DWG NO. 38681AD-SH1

JOB NO.	38681
SCALE 1:24	DATE
DRAWN BY ANZ	26JUN23
CHECKED BY JJR	27JUN23
SHEET SIZE D	SHEET NO. 1 OF 2

View File Created 15-FEB-2024 09:16:20