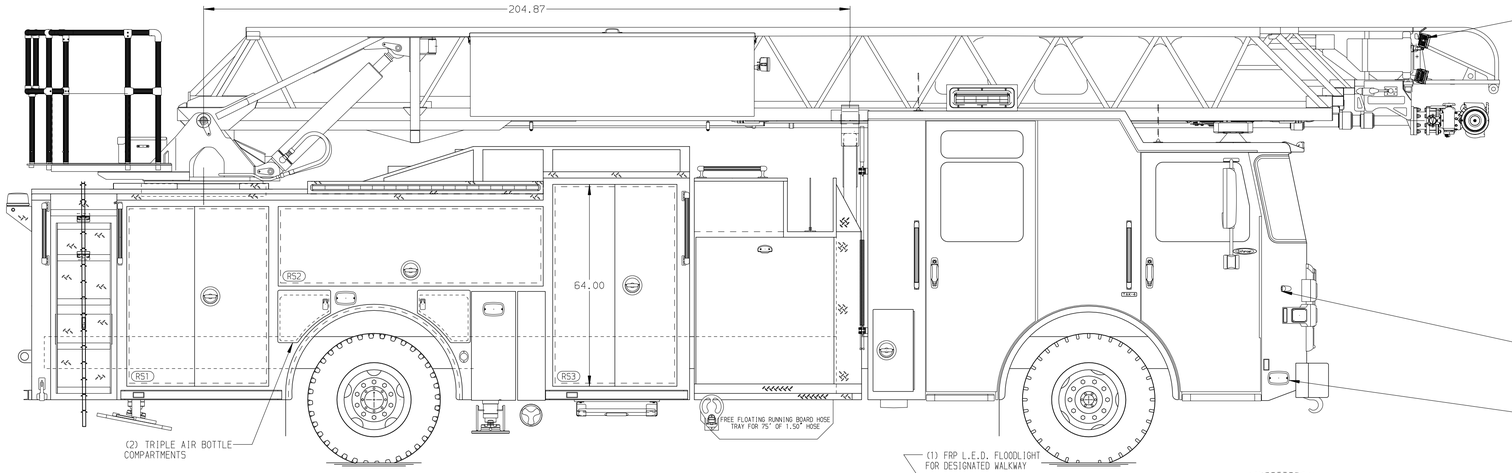

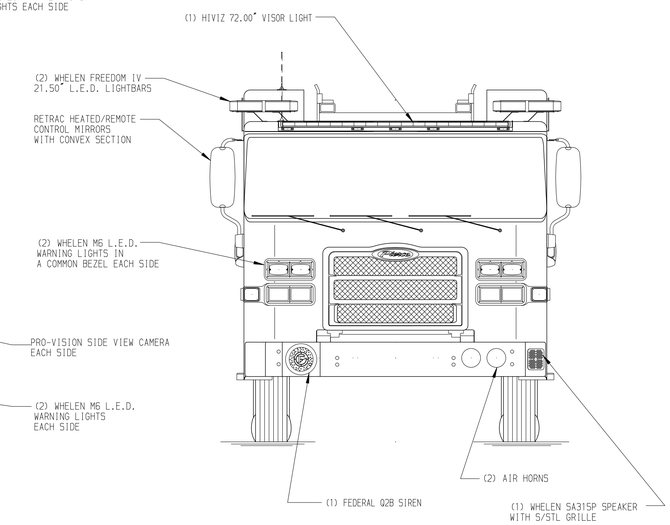

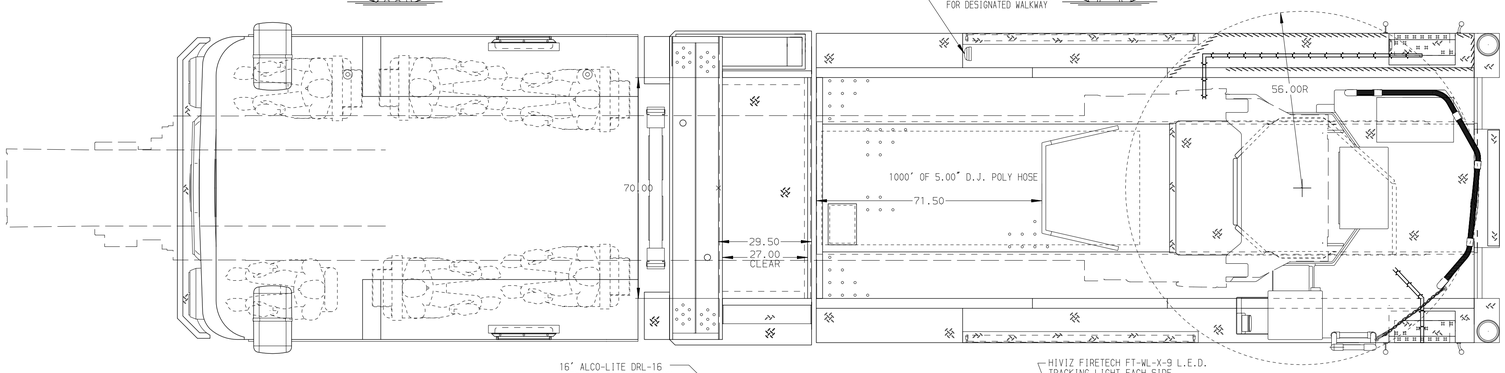

BODY	WATER TANK
107' ASL Aluminum Body	500 Gallon Poly Water Tank
COMPT,LEFT SIDE FRONT	Foam System
Full Height Lap Forward	Foam System Not Required
COMPT,LEFT SIDE REAR	Foam Cell
Full Height Lap Rearward	Foam Cell Not Required
COMPT,RIGHT SIDE FRONT	
Full Height Lap Forward	
COMPT,RIGHT SIDE REAR	
Full Height Lap Rearward	

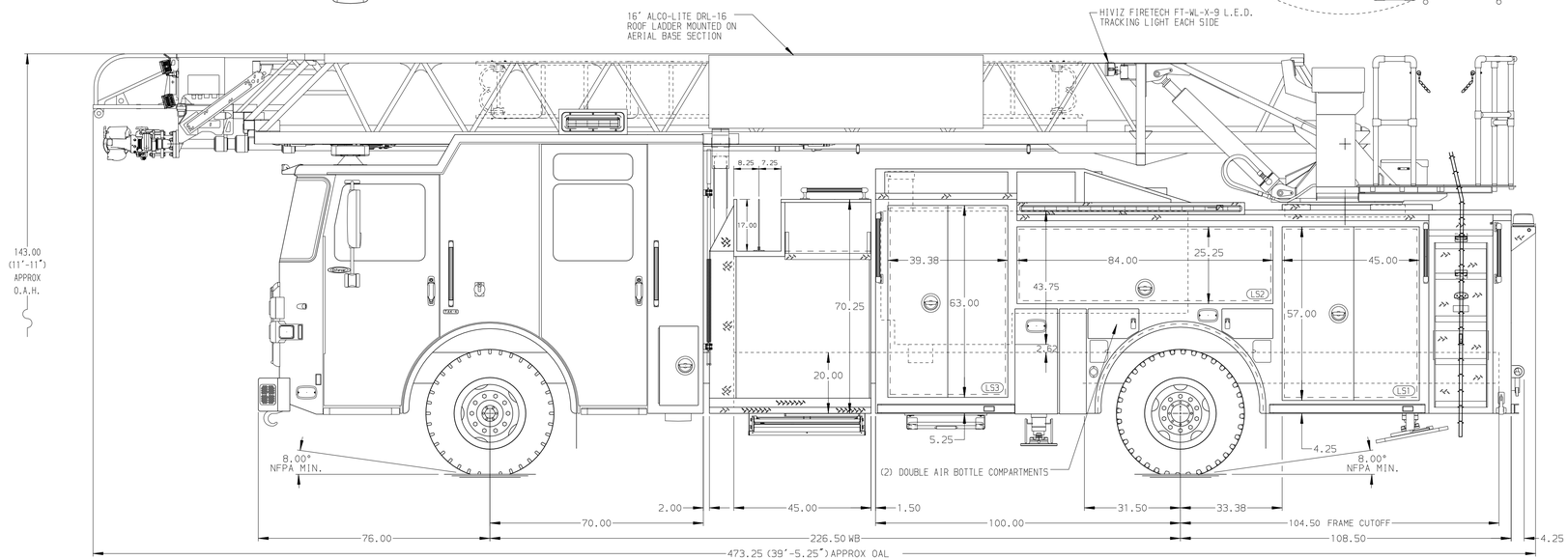

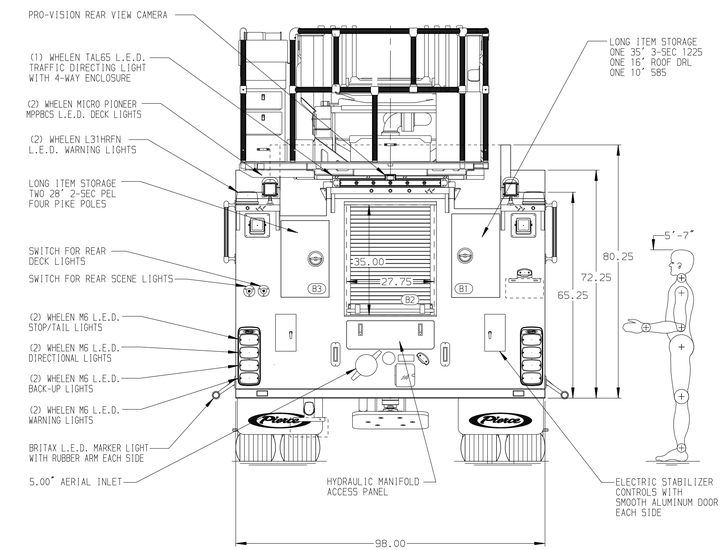

CHASSIS	CAB	AXLE,FRONT,CUSTOM	TRANSMISSION	PUMPHOUSE	CROSSLAYS,1.50"	SPEEDLAYS	SAFETY
Enforcer Chassis	7010 Notched Enforcer Cab	22,800 Lb TAK-4 Axle	Allison 6th Gen, 4000 EVS P	45" Control Zone Side Mount	(2) 1.50" Standard Capacity	Speedlays Not Required	-
ENGINE	BUMPER	AXLE,REAR		PUMP	CROSSLAYS,2.50"	GENERATOR	Frontal Impact Protection
500 HP Cummins X12 Engine	Non-Extended Painted Steel	33,500 Lb Meritor Axle		1500 GPM Hale QMAX	2.50" Crosslay Not Required	Generator Not Required	

CUSTOMER APPROVAL

APPROVED BY: _____

DATE: _____

Pierce MANUFACTURING INC.

JOB NO.	38684
SCALE 1:24	DATE
DRAWN BY LWE	02JAN23
CHECKED BY NAK	11JAN23
SHEET SIZE D	SHEET NO. 1 OF 1

TITLE: 107' ASCENDANT AERIAL LADDER AND BODY ASSEMBLY
-

FOR: ST. JOHNS FIRE DEPARTMENT
JOHNS ISLAND, SC

DWG NO. 38684AD

REV	DATE	BY	CH	
				CHASSIS DATA
				MAKE: PIERCE
▽	-	-	-	MODEL: ENFORCER

NOTE

DIMENSIONS SHOWN ARE APPROXIMATE AND ARE SUBJECT TO MINOR DEVIATIONS AS MAY OCCUR OR BE NECESSARY IN CONSTRUCTION.
MINOR DETAILS NOT SHOWN.

1. NO LIMITED RETRACTION REQUIRED
2. ONE 1.50 OUTLET WITH 2.00 PIPING AND SWIVEL LOCATED IN CENTER BUMPER TRAY
3. SHORELINE 30 AMP RECEPTACLE LOCATED ON DRIVER SIDE OF THE CAB
4. AIR INLET WITH DISCONNECT COUPLING IN THE DRIVER SIDE PUMP PANEL
5. BATTERY CHARGER LOCATED PER ORDER
6. BATTERY CHARGE INDICATOR LOCATED ON THE DRIVER SIDE SEAT RISER
7. TEN ADJUSTABLE SHELVES PER ORDER
8. FOUR FLOOR MOUNTED SLIDE-OUT TRAYS PER ORDER
9. NON-RAISED AERIAL PEDESTAL
10. LIFTING EYE ROPE RESCUE ATTACHMENT AT AERIAL TIP
11. 1500 GPM HIGH FLOW WATERWAY
12. WHEEL CHOCKS AND MOUNTING PROVIDED BY DEPARTMENT
13. SIX SLIDE-OUT TRAYS PER ORDER
14. ONE VERTICAL PARTITION PER ORDER
15. TWO PEGBOARDS ON BACK WALLS PER ORDER
16. THREE 120V RECEPTACLES PER ORDER
17. RUNG LIGHTING ON AERIAL LADDER
18. DC POWER PER ORDER

View File Created 11-JAN-2023 11:11:51