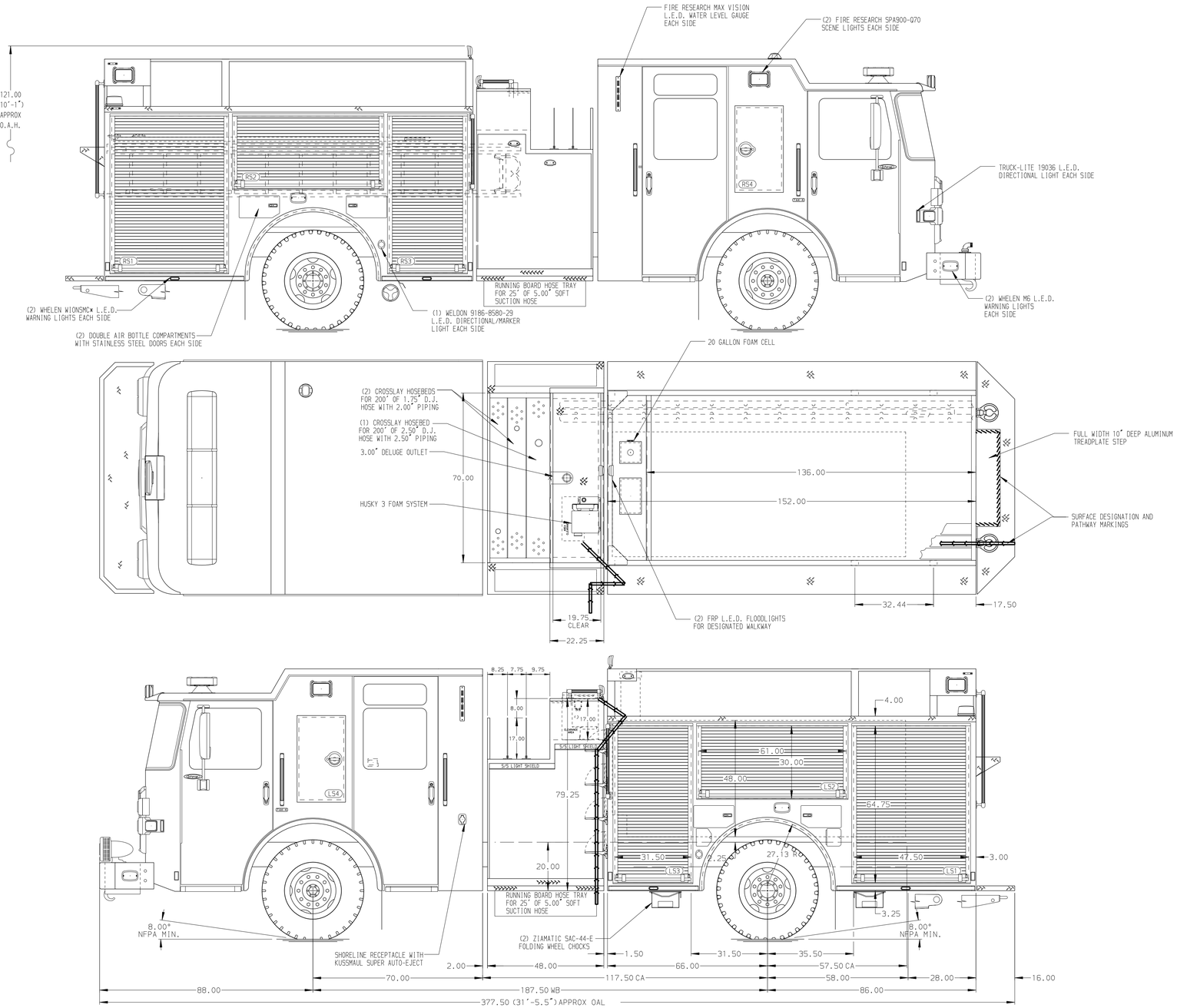


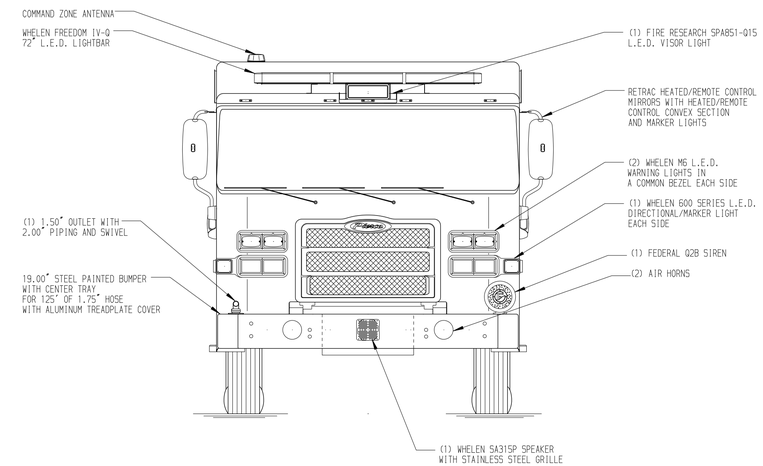


HOSEBED CAPACITIES

1. 1000' OF 3.00" D.J. HOSE
2. 1000' OF 5.00" D.J. HOSE

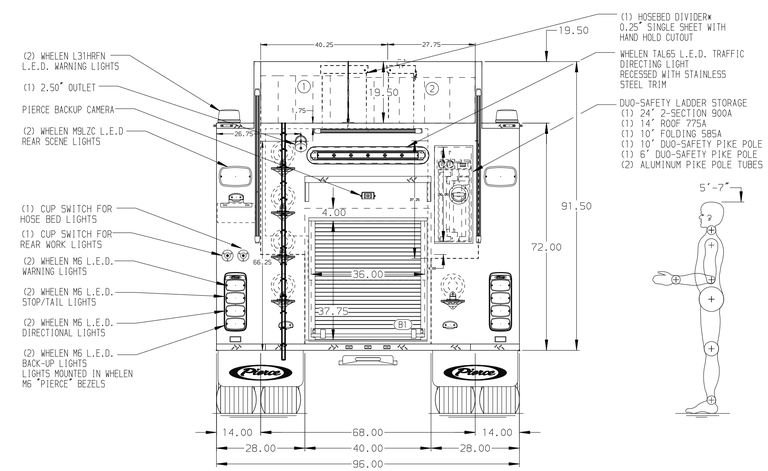


ALUMINUM BODY

SIDE ROLL AND FRONTAL IMPACT PROTECTION

NOTE

DIMENSIONS SHOWN ARE APPROXIMATE AND ARE SUBJECT TO MINOR DEVIATIONS AS MAY OCCUR OR BE NECESSARY IN CONSTRUCTION.
MINOR DETAILS NOT SHOWN.

1. BATTERY CHARGER MOUNTED BEHIND DRIVER'S SEAT
2. BATTERY CHARGER INDICATOR BEHIND DRIVER'S SEAT DISPLAYED THROUGH WINDOW
3. DUAL L.E.D. LIGHT STRIPS LOCATED IN HOSE BED
4. SEVEN DRIP PAN GUARDS FOR ROLL-UP DOORS LOCATED PER ORDER
5. SIX FULL WIDTH/DEPTH ADJUSTABLE SHELVES LOCATED PER ORDER
6. AIR INLET WITH DISCONNECT COUPLING LOCATED IN DS STEP WELL

| REV | DATE | BY | CH |
|---|---|---|---|
| ▽ | - | - | - |

CUSTOMER APPROVAL

APPROVED BY: _____

DATE: _____

Pierce MANUFACTURING INC.

| | |
|---|---|
| CHASSIS DATA | |
| MAKE | PIERCE |
| MODEL | ENFORCER |
| TITLE | 1500-D-1000P, 980 GAL WATER W/20 GAL FOAM,152" BODY (3) CROSSLAYS, HUSKY 3, LADDERS BTWN TANK & SS |
| FOR | PIERCE FIELD UNIT APPLETON, WISCONSIN |
| DWG NO. | 38710AD |

| | |
|---|---|
| JOB NO. | 38710 |
| SCALE | 1:24 |
| DATE | |
| DRAWN BY | LME 03MAY22 |
| CHECKED BY | CZA 04MAY22 |
| SHEET SIZE | D |
| SHEET NO. | 1 OF 1 |

View File Created 04-MAY-2022 09:04:59