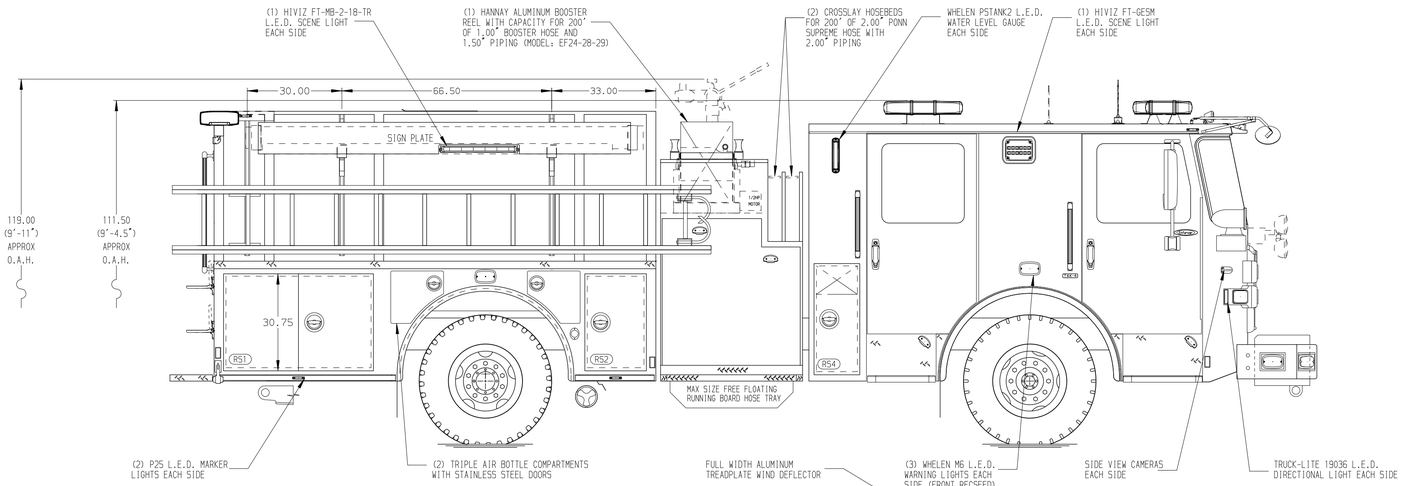

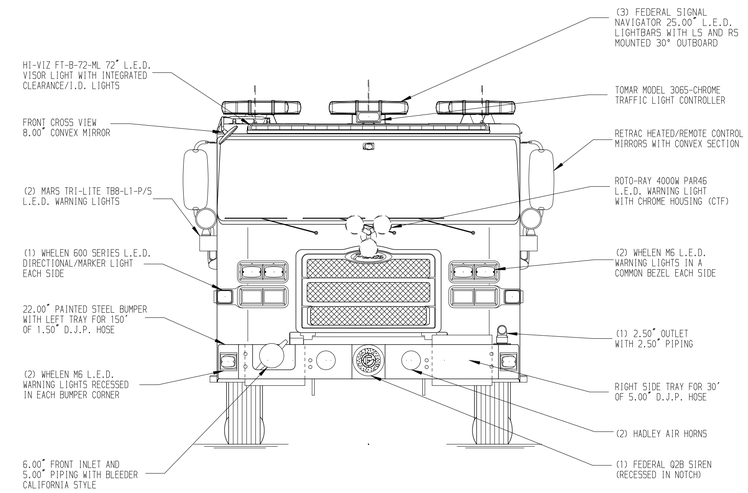

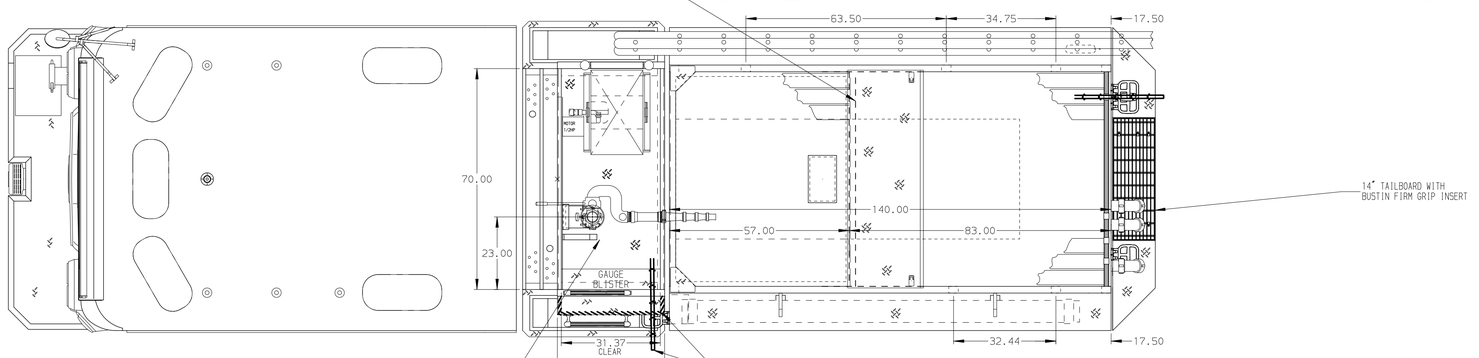

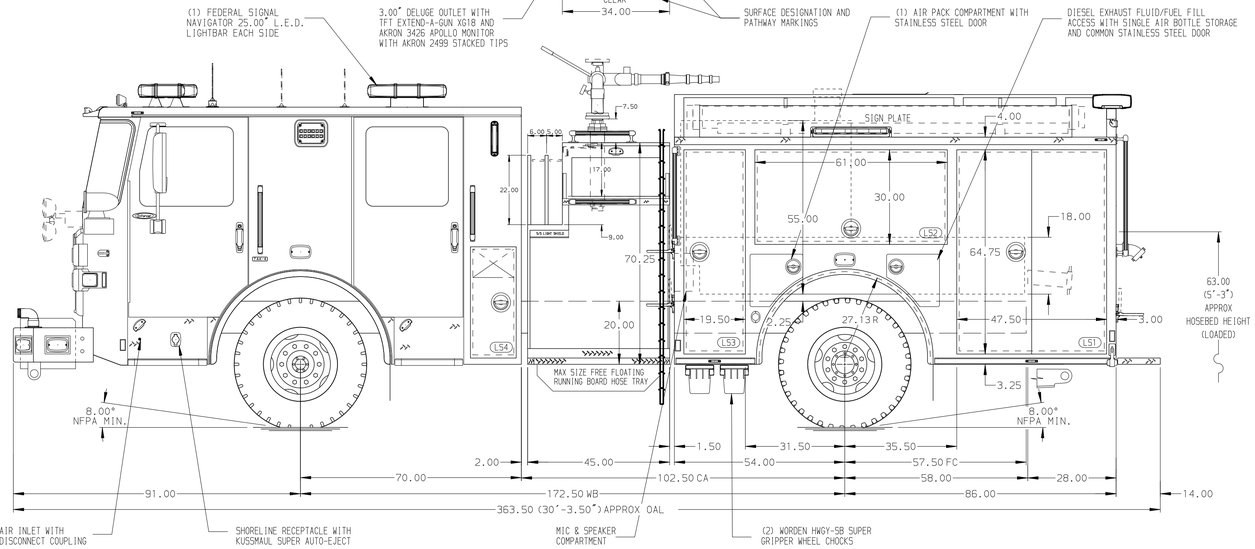

HOSEBED CAPACITIES

1. - 400' OF 3.00" PONN SUPREME HOSE
2. - 400' OF 1.75" PONN SUPREME HOSE
3. - 200' OF 2.50" PONN SUPREME HOSE
4. - 1500' OF 5.00" FIREQUIP LDH HOSE
5. - 400' OF 3.00" PONN SUPREME HOSE

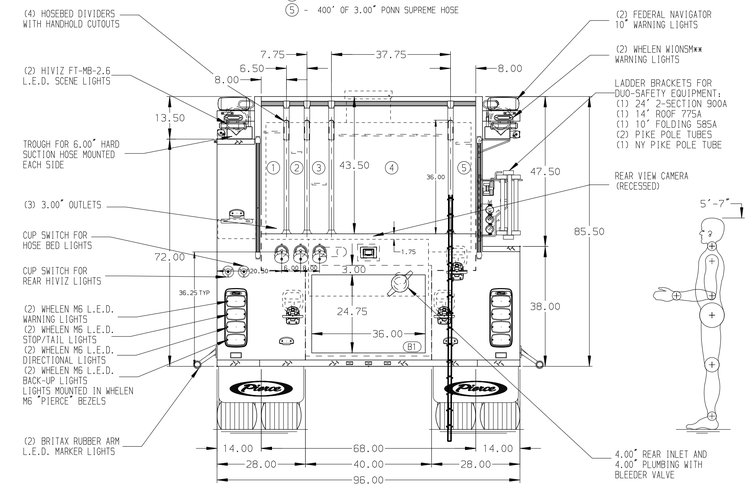

ALUMINUM BODY

NOTE

DIMENSIONS SHOWN ARE APPROXIMATE AND ARE SUBJECT TO MINOR DEVIATIONS AS MAY OCCUR OR BE NECESSARY IN CONSTRUCTION.
MINOR DETAILS NOT SHOWN.

1. BATTERY CHARGER LOCATED BEHIND DRIVER'S SEAT
2. BATTERY CHARGER INDICATOR LOCATED ON DRIVER'S SEAT RISER
3. DUAL L.E.D. LIGHT STRIPS LOCATED IN HOSE BED
4. REVERSED HINGED DOOR ON COMPARTMENT LS3

REV	DATE	BY	CH
7	24APR24	JJB	COS
6	07FEB24	JJB	COS
5	06FEB24	JJB	COS
4	16NOV23	JJB	JKR
3	15NOV23	JJB	JKR

CHASSIS DATA
MAKE: PIERCE
MODEL: ENFORCER

Pierce MANUFACTURING INC.

TITLE: 1500-D-750P, 750 GAL WATER TANK, 140" FDLER PUMPER RS LADDER BRACKETS, (2) XLAYS, DELUGE, 45" PUMPHOUSE
FOR: RICHLAND TOWNSHIP FIRE RESCUE QUAKERTOWN, PENNSYLVANIA
DWG NO.: 38722AD

JOB NO.	38722
SCALE	1:24
DATE	
DRAWN BY	JJB 30JUN23
CHECKED BY	CDU 30JUN23
SHEET SIZE	D
SHEET NO.	1 OF 1

View File Created 24-APR-2024 09:00:52