Pumper, PUC

BODY
Pumper, PUC, Aluminum

CHASSIS
Enforcer Chassis, PUC

CHASSIS

AXLE,FRONT,CUSTOM
19,500 lb TAK-4 Axle

AXLE,REAR
27,000 lb Dana Axle

ENGINE
450 HP Cummins L9 Engine

TRANSMISSION
Allison 6th Gen, 3000 EVS P

BUMPER
19" Extended Stainless Steel

CAB
7010 Enforcer Cab, PUC

BODY

WATER TANK
750 Gallon Poly Water Tank

COMPT,PUMPER,REAR
33.50" FF Rollup Rear Compt w/Tailboard, PUC

COMPT,PUMPER,LEFT SIDE
177" Rollup Full Height & Depth Front & Rear, PUC

COMPT,PUMPER,RIGHT SIDE
177" Rollup Full Height & Depth Front & Rear, PUC

FIRE SUPPRESSION

PUMPHOUSE
Control Zone, PUC

PUMP
1500 GPM Pierce PUC

CROSSLAYS,1.50"
(2) 1.50", Poly Trays, 200'

CROSSLAYS,2.50"
(1) 1.50" & (1) 2.50, Poly Tray, 250'

GENERATOR
Generator Not Required

Foam System
Husky 3 Single Agent Foam System

Foam Cell
20 Gallon Foam Cell, Not Reduced Water, PUC

Side Roll and Frontal Impact Protection

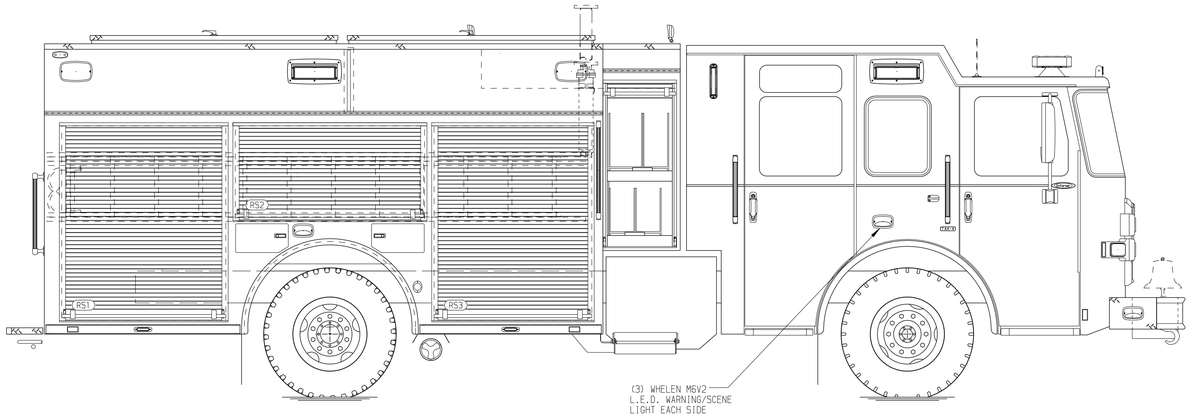

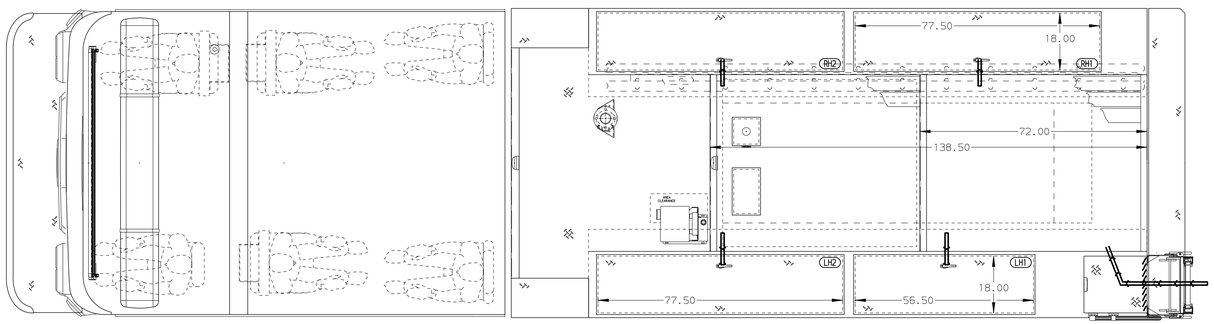

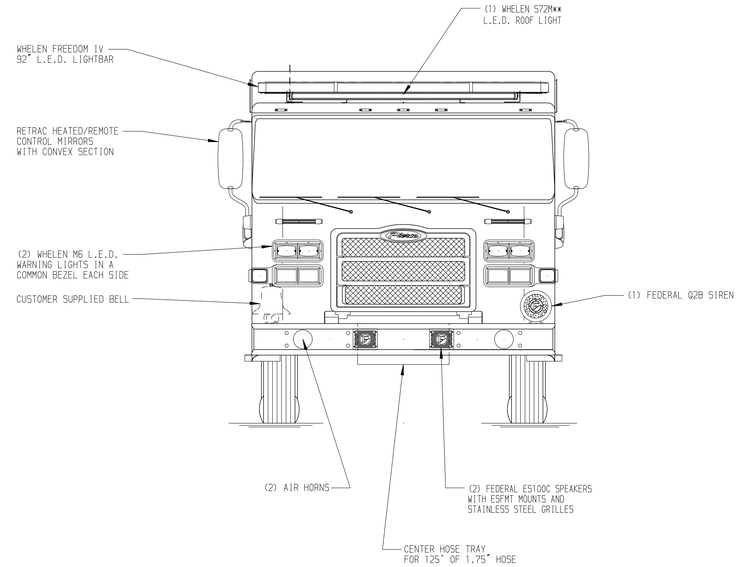

HOSEBED CAPACITY

BED 1
650' OF 4.00" D.J. POLY HOSE

BED 2
1000' OF 3.00" D.J. POLY HOSE

BED 3
400' OF 2.50" D.J. POLY HOSE

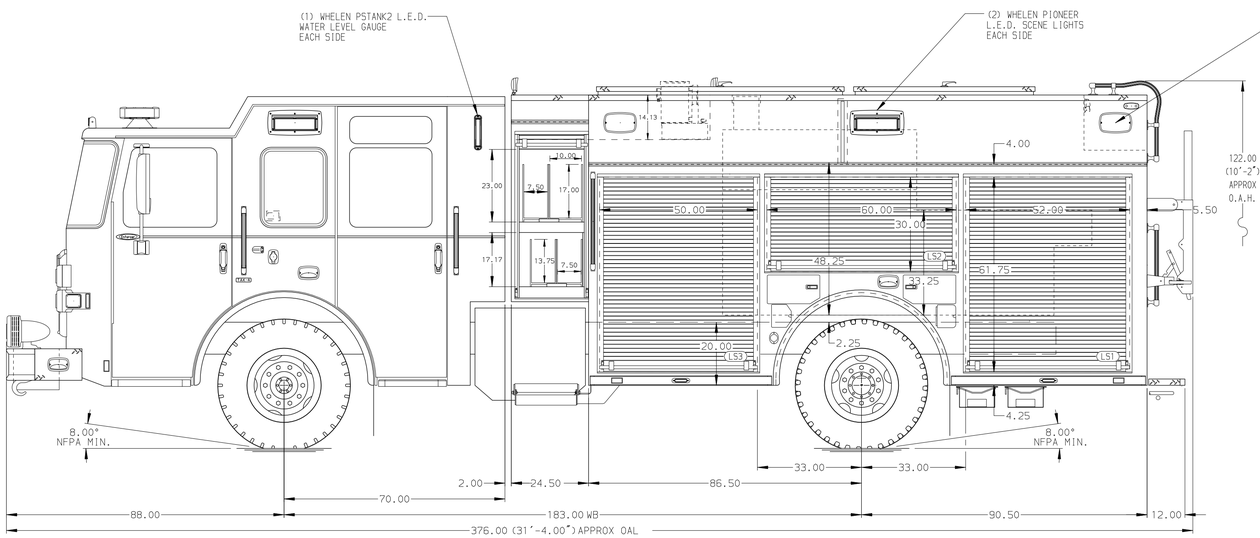

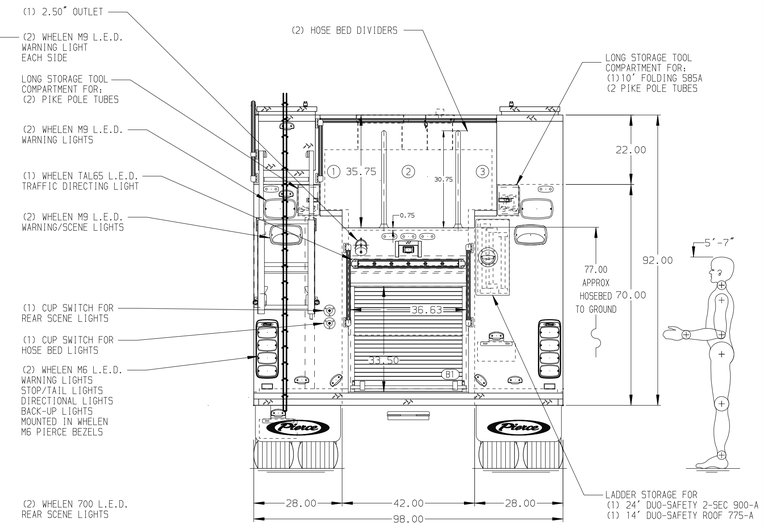

NOTE

DIMENSIONS SHOWN ARE APPROXIMATE AND ARE SUBJECT TO MINOR DEVIATIONS AS MAY OCCUR OR BE NECESSARY IN CONSTRUCTION.
MINOR DETAILS NOT SHOWN.

1. ONE 1.50 OUTLET WITH 2.00 PIPING AND SWIVEL LOCATED IN CENTER BUMPER TRAY
2. SHORELINE RECEPTACLE WITH KUSSMAUL SUPER AUTO-EJECT LOCATED ON DRIVER SIDE OF THE CAB
3. BATTERY CHARGER LOCATED IN COMPARTMENT PER SHOP ORDER
4. BATTERY CHARGE INDICATOR LOCATED ON THE DRIVER SIDE THROUGH WINDOW
5. TEN ADJUSTABLE SHELVES LOCATED PER ORDER
6. FOUR FLOOR MOUNTED SLIDE-OUT TRAYS LOCATED PER ORDER
7. TWO SWING-OUT GEAR GRID SYSTEMS LOCATED PER ORDER
8. SIX 120V RECEPTACLES LOCATED PER ORDER

REV	DATE	BY	CH
7	17JAN24	MMF	CLM
8	30NOV23	MMF	CLM
7	26OCT23	MMF	CLM

CHASSIS DATA
MAKE: PIERCE
MODEL: ENFORCER

Pierce MANUFACTURING INC.

TITLE: Pierce PUC Pumper Approval Drawing
–
FOR: Village of Clarendon Hills
–
DWG NO.: 38727AD

JOB NO.	38727
SCALE	1:24
DATE	
DRAWN BY	WRE 16AUG23
CHECKED BY	MMF 18AUG23
SHEET SIZE	D
SHEET NO.	1 OF 1

View File Created 17-JAN-2024 10:57:16