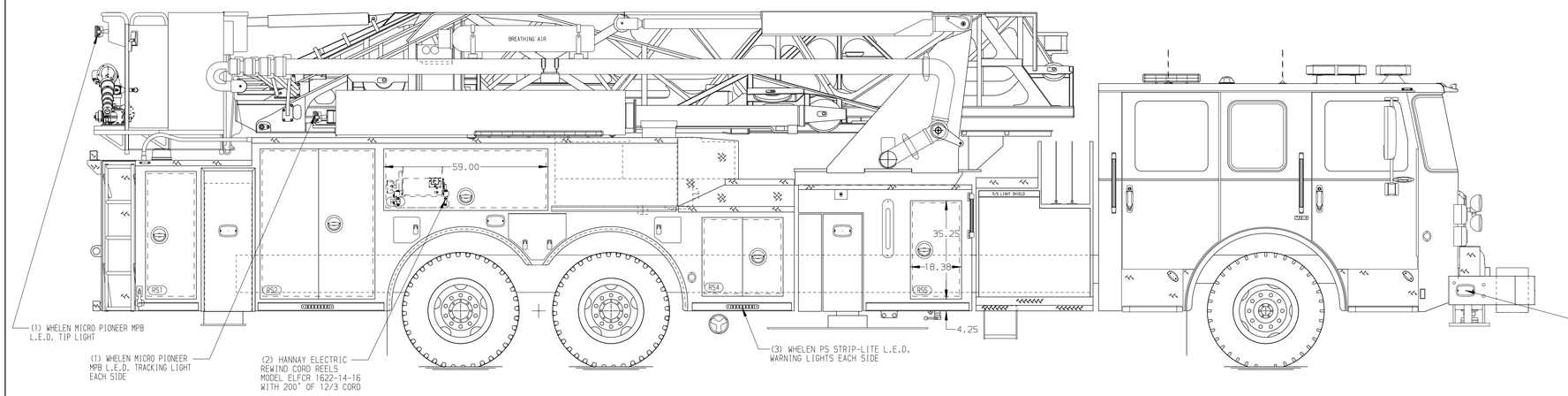

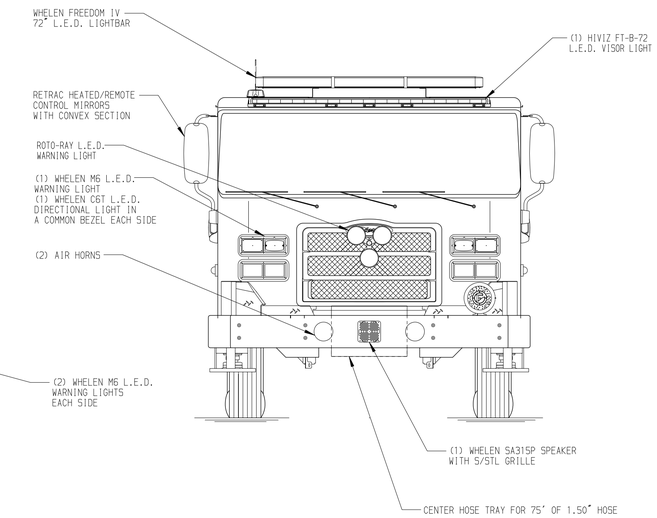

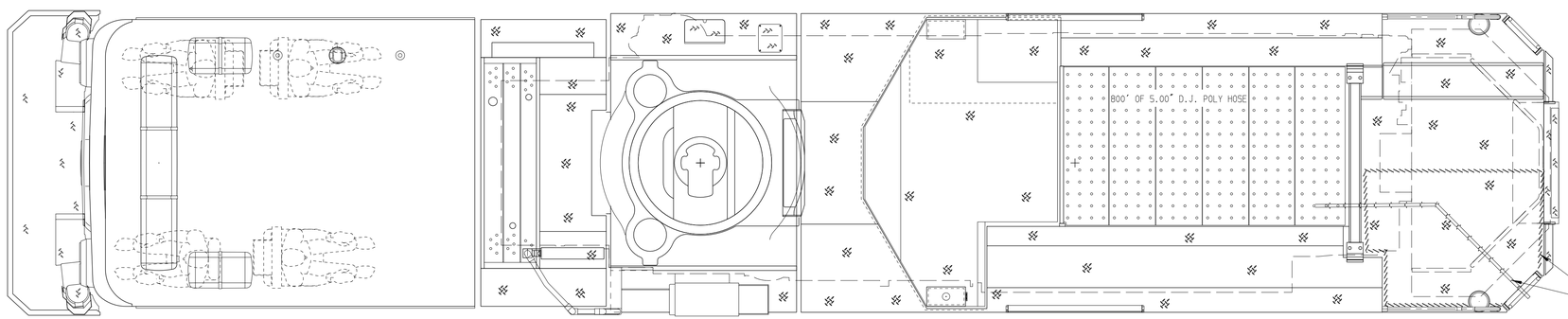

BODY	WATER TANK
100' Ascendant Aerial Tower Alum Body	280 Gallon Poly Water Tank
COMPT,LEFT SIDE	Foam System
Full Height Lap Doors	Husky 3 Single Agent Foam System
COMPT,RIGHT SIDE	Foam Cell
Full Height Lap Doors	20 Gallon Foam Cell, Reduced Water

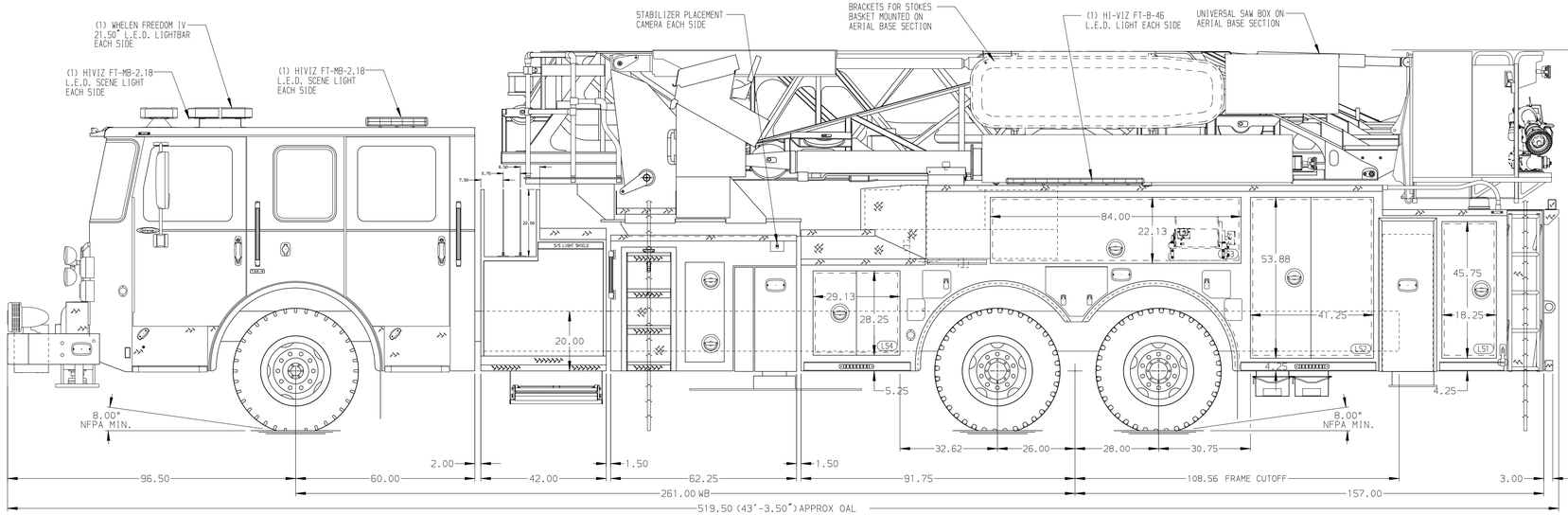

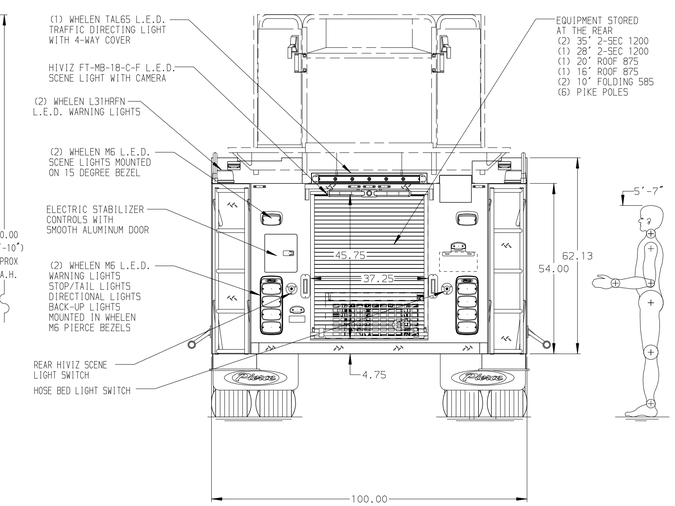

CHASSIS	CAB	AXLE,FRONT,CUSTOM	TRANSMISSION	PUMPHOUSE	CROSSLAYS,1.50"	SPEEDLAYS	SAFETY
Enforcer Chassis	6000 Enforcer Cab	24,000 Lb TAK-4 Axle	ALlison 6th Gen, 4000 EVS P	42" Control Zone Side Mount	(2) 1.50", 200' OF 1.75" HOSE	Speedlays Not Required	Side Roll and Frontal Impact Protection
ENGINE	BUMPER	AXLE,REAR		PUMP	CROSSLAYS,2.50"	GENERATOR	
500 HP Cummins X12 Engine	27" Painted Aluminum	54,000 Lb Meritor Axle		2000 GPM Waterous S100	(1) 2.50", 200' OF 2.50" HOSE	Harrison 8kW MID Hydraulic	

CUSTOMER APPROVAL

APPROVED BY: _____

DATE: _____

Pierce MANUFACTURING INC.

NOTE

DIMENSIONS SHOWN ARE APPROXIMATE AND ARE SUBJECT TO MINOR DEVIATIONS AS MAY OCCUR OR BE NECESSARY IN CONSTRUCTION.
MINOR DETAILS NOT SHOWN.

1. CIRCUIT BREAKER PANEL IN COMPARTMENT PER ORDER
2. SHORELINE RECEPTACLE WITH KUSSMAUL SUPER AUTO-EJECT LOCATED ON DRIVER SIDE OF THE CAB
3. AIR INLET WITH DISCONNECT COUPLING IN THE DRIVER SIDE STEPWELL
4. BATTERY CHARGER LOCATED PER ORDER
5. BATTERY CHARGE INDICATOR LOCATED ON THE DRIVER SIDE SEAT RISER
6. THREE ADJUSTABLE SHELVERS LOCATED PER ORDER
7. NON-RAISED AERIAL PEDESTAL
8. 3-in-1 LYFECOMBO BRACKETS AT AERIAL BASKET
9. ONE 6-PLACE 120V RECEPTACLE IN COMPARTMENT PER ORDER
10. RUNG LIGHTING ON AERIAL LADDER
11. DC POWER TO AERIAL TIP
12. ONE SLIDE-OUT TRAY IN COMPARTMENT PER ORDER
13. THREE TILT/SLIDE-OUT TRAYS IN COMPARTMENTS PER ORDER
14. ONE CTECH (3) DRAWER ASSEMBLY IN COMPARTMENT PER ORDER
15. TWO SLIDE-OUT TOOLBOARDS IN COMPARTMENTS PER ORDER
16. ONE FLOOR MOUNTED SLIDE-OUT TRAY IN COMPARTMENT PER ORDER
17. NORCOLD REFRIGERATOR LOCATED PER ORDER

REV	DATE	BY	CH
▽	-	-	-

CHASSIS DATA	
MAKE	PIERCE
MODEL	ENFORCER
TITLE	100' ASCENDANT AERIAL TOWER AND BODY ASSEMBLY -
FOR	ELKIN FIRE DEPARTMENT ELKIN, NC
DWG NO.	38740AD

JOB NO.	38740
SCALE	1:24
DATE	
DRAWN BY	LWE
	06JULY22
CHECKED BY	ZCH
	07JUL22
SHEET SIZE	D
SHEET NO.	1 OF 1

View File Created 07-JUL-2022 08:40:50