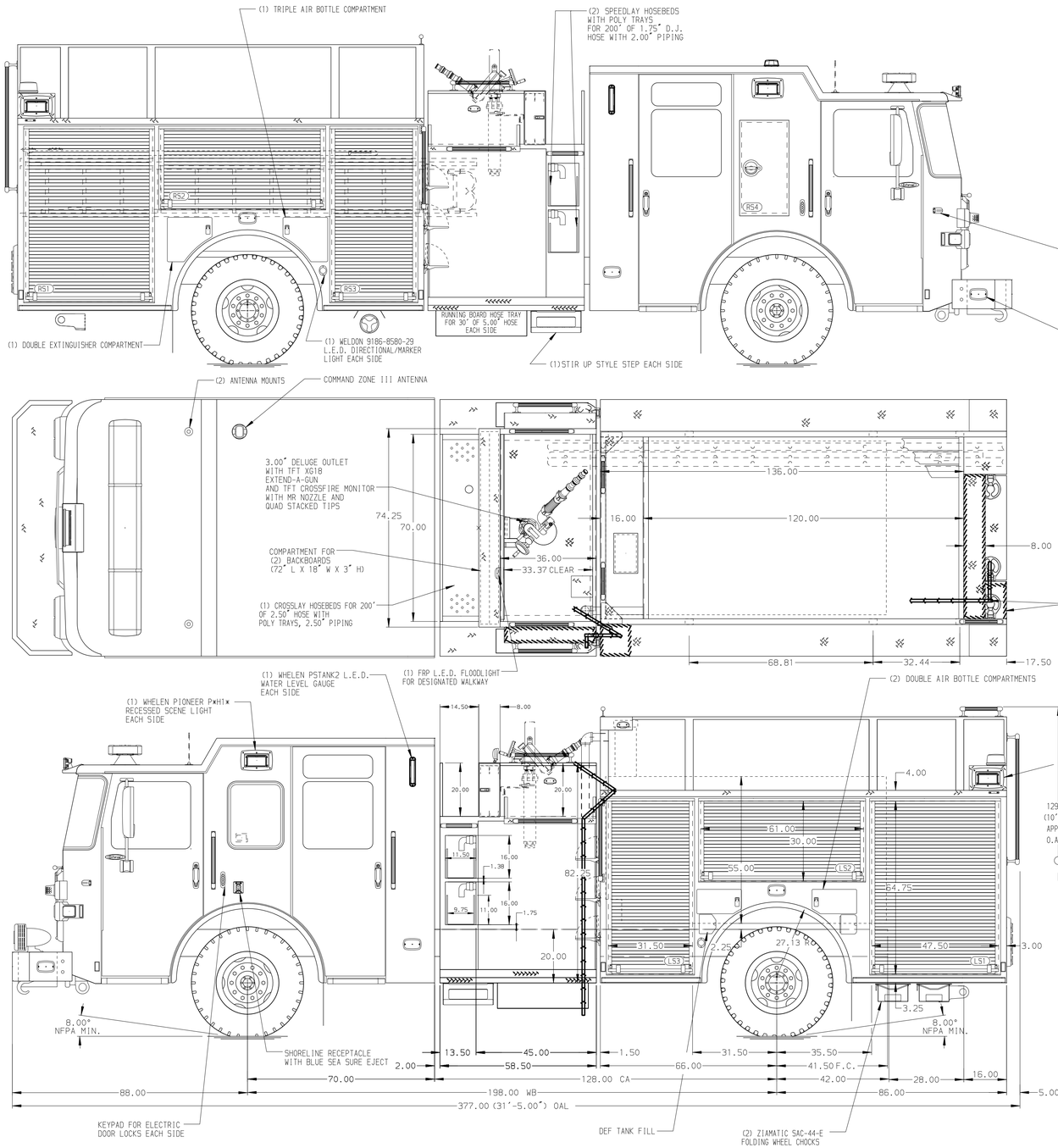

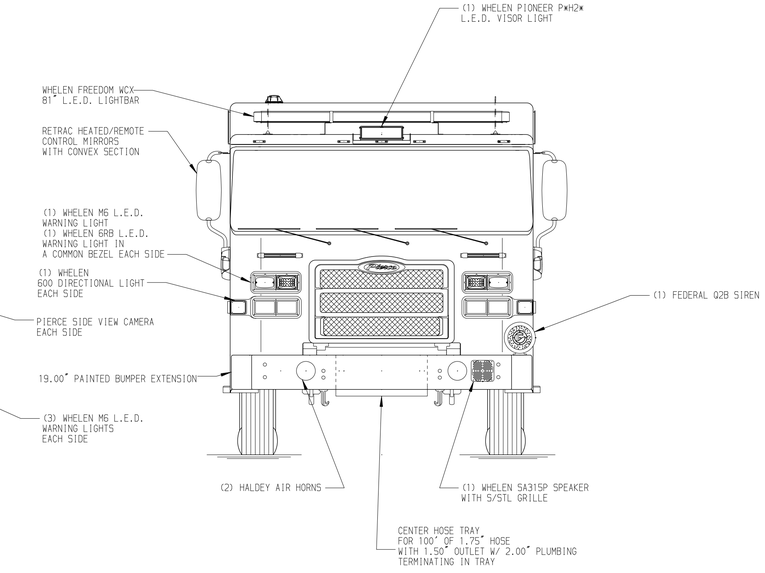

HOSEBED CAPACITIES

1. 200' OF 2.50" D.J. POLY HOSE
2. 1500' OF 5.00" NITRILE HOSE
3. 500' OF 2.50" D.J. POLY HOSE

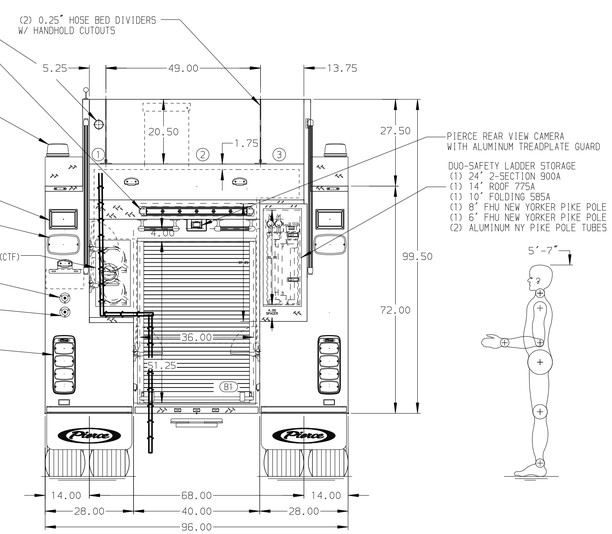

ALUMINUM BODY

SIDE ROLL AND FRONTAL IMPACT PROTECTION

NOTE

DIMENSIONS SHOWN ARE APPROXIMATE AND ARE SUBJECT TO MINOR DEVIATIONS AS MAY OCCUR OR BE NECESSARY IN CONSTRUCTION.
MINOR DETAILS NOT SHOWN.

1. ONSPOT AUTOMATIC TIRECHAINS TO BE PROVIDED AT THE REAR
2. AIR INLET WITH DISCONNECT COUPLING IN THE DRIVER SIDE STEPWELL
3. BATTERY CHARGER LOCATED IN THE CAB PER SHOP ORDER
4. BATTERY CHARGER INDICATOR LOCATED BEHIND THE DRIVERS SEAT DISPLAYED THRU THE WINDOW
5. SIX ADJUSTABLE SHELVES IN COMPARTMENTS PER SHOP ORDER
6. ONE FLOOR MOUNTED SLIDE-OUT TRAY WITH SLIDEMASTER SLIDE IN COMPARTMENT PER SHOP ORDER
7. TWO FLOOR MOUNTED SLIDE-OUT TRAYS IN COMPARTMENTS PER SHOP ORDER
8. ONE SLIDE-OUT TOOLBOARD LOCATED IN COMPARTMENT PER SHOP ORDER
9. PAC TRAC ON BACK WALL IN COMPARTMENTS PER SHOP ORDER
10. ONE 120V DUPLEX RECEPTACLE LOCATED IN COMPARTMENT PER SHOP ORDER
11. TWO 6-PLACE RECEPTACLE STRIPS LOCATED IN THE CAB PER SHOP ORDER

REV	DATE	BY	CH
1	18JAN24	LST	CLM
0	09NOV23	LST	EGO

CHASSIS DATA
MAKE: PIERCE
MODEL: ENFORCER

Pierce MANUFACTURING INC.

TITLE: 1500-D-1000 GAL POLY, 152" FH FDLER BODY LADDERS BTWN. TANK & S. SHEET, (2) SPLAYS, (1) X-LAY
FOR: CITY OF LAFAYETTE FIRE DEPARTMENT LAFAYETTE, INDIANA
DWG NO.: 38770AD

JOB NO.	SCALE	DRAWN BY	CHECKED BY	SHEET SIZE	SHEET NO.
38770	1:24	LST	EGO	D	1 OF 1
	DATE	25OCT23	03NOV23		

View File Created 19-JAN-2024 08:42:40