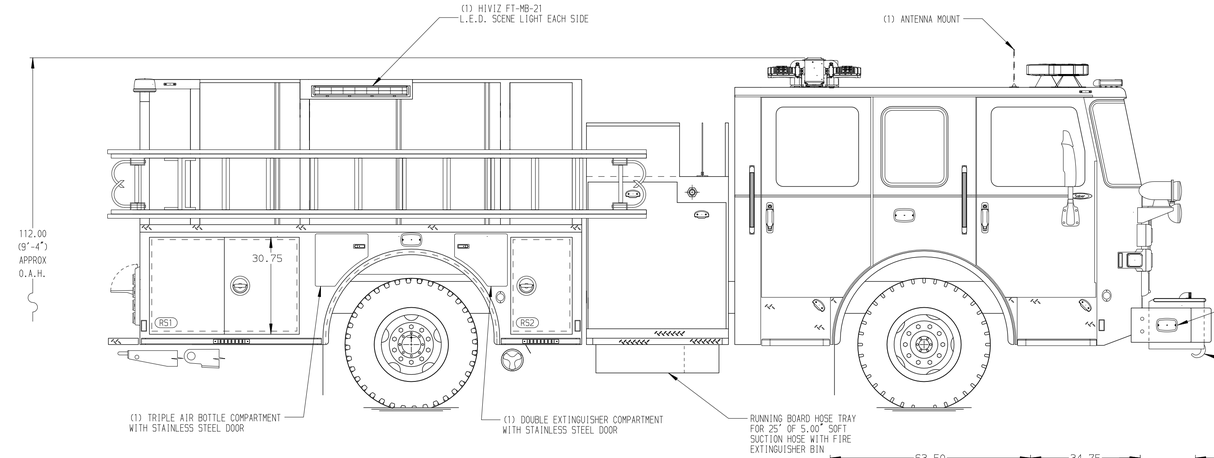

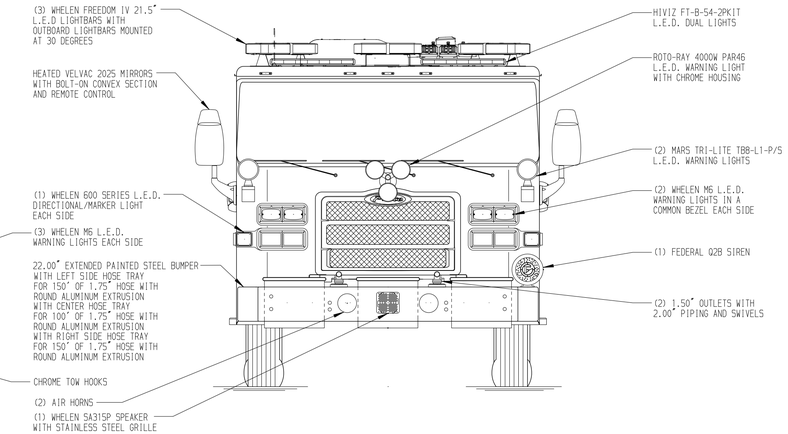

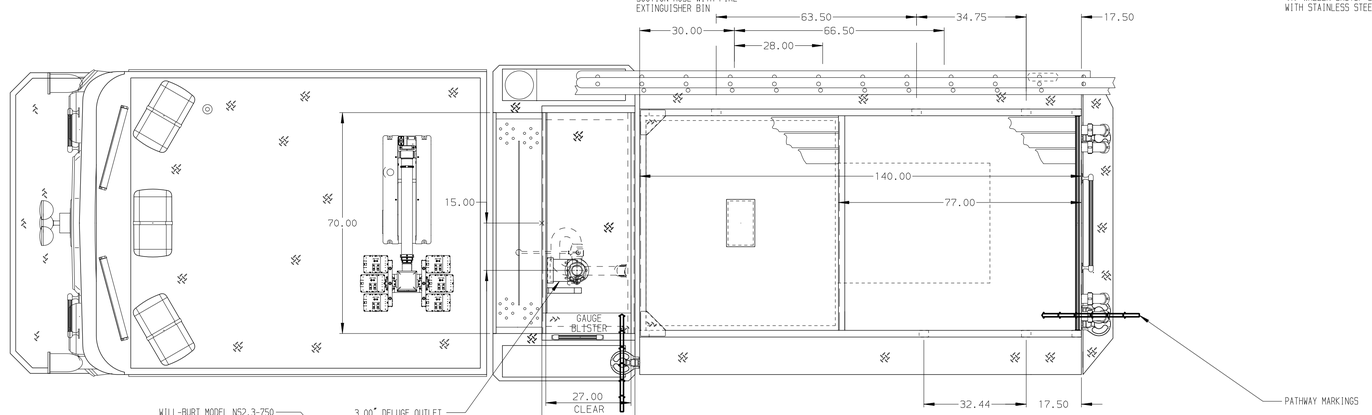

HOSEBED CAPACITIES

1. 300' OF 1.75" D.J. POLY HOSE
2. 200' OF 2.00" D.J. POLY HOSE
3. 1200' OF 5.00" D.J. POLY HOSE
4. 400' OF 3.00" D.J. POLY HOSE
5. 300' OF 1.75" D.J. POLY HOSE

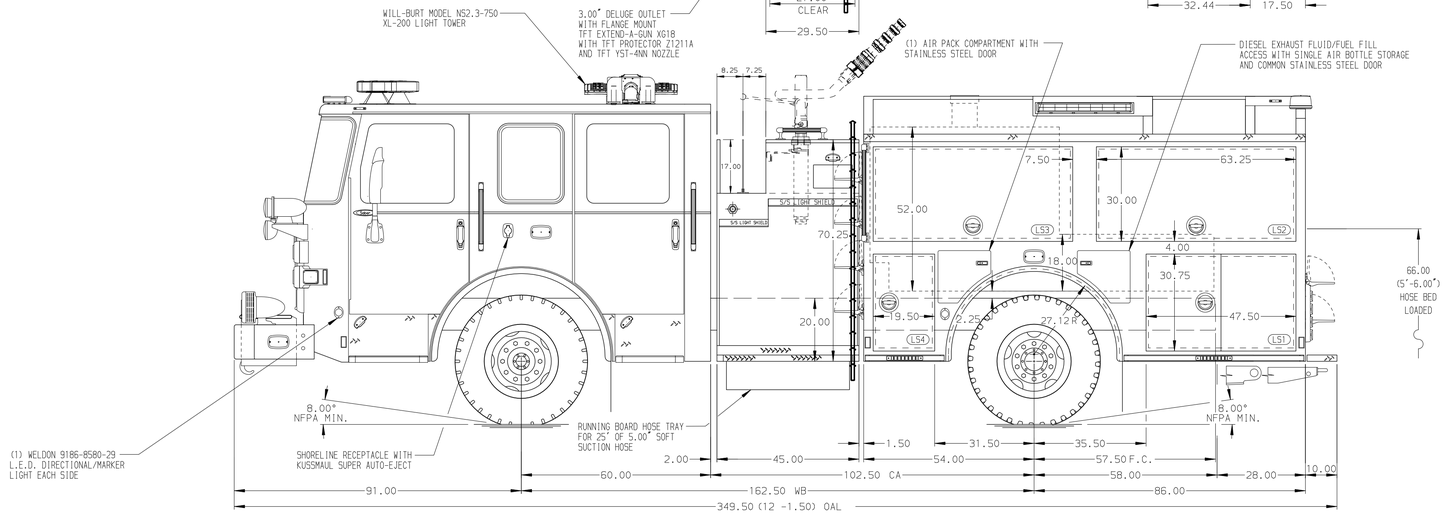

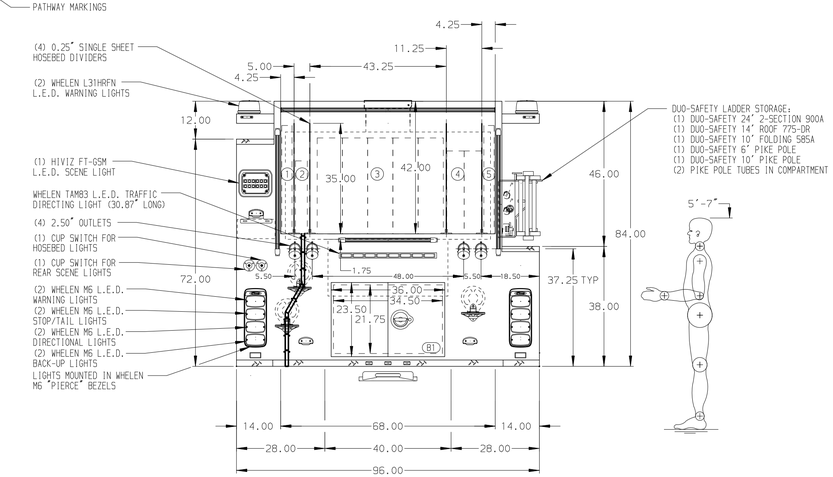

ALUMINUM BODY

NOTE

DIMENSIONS SHOWN ARE APPROXIMATE
AND ARE SUBJECT TO MINOR DEVIATIONS
AS MAY OCCUR OR BE NECESSARY IN
CONSTRUCTION.
MINOR DETAILS NOT SHOWN.

CUSTOMER APPROVAL

APPROVED BY: _____

DATE: _____

REV	DATE	BY	CH
▽	-	-	-

CHASSIS DATA — MAKE: PIERCE — MODEL: SABER FR

Pierce MANUFACTURING INC.

TITLE: 1500-D-750 GAL POLY, 140" FH FDLER LEFT SIDE, LOW FDLER RIGHT SIDE, LADDER BRACKETS, (2) CROSSLAYS

FOR: TOWN OF SELMA FIRE DEPARTMENT
SELMA, NORTH CAROLINA

DWG NO.: 38811AD

JOB NO.	38811
SCALE	1:24
DATE	
DRAWN BY	ARI
	18NOV22
CHECKED BY	CDU
	18NOV22
SHEET SIZE	D
SHEET NO.	1 OF 1

View File Created 21-NOV-2022 06:57:11