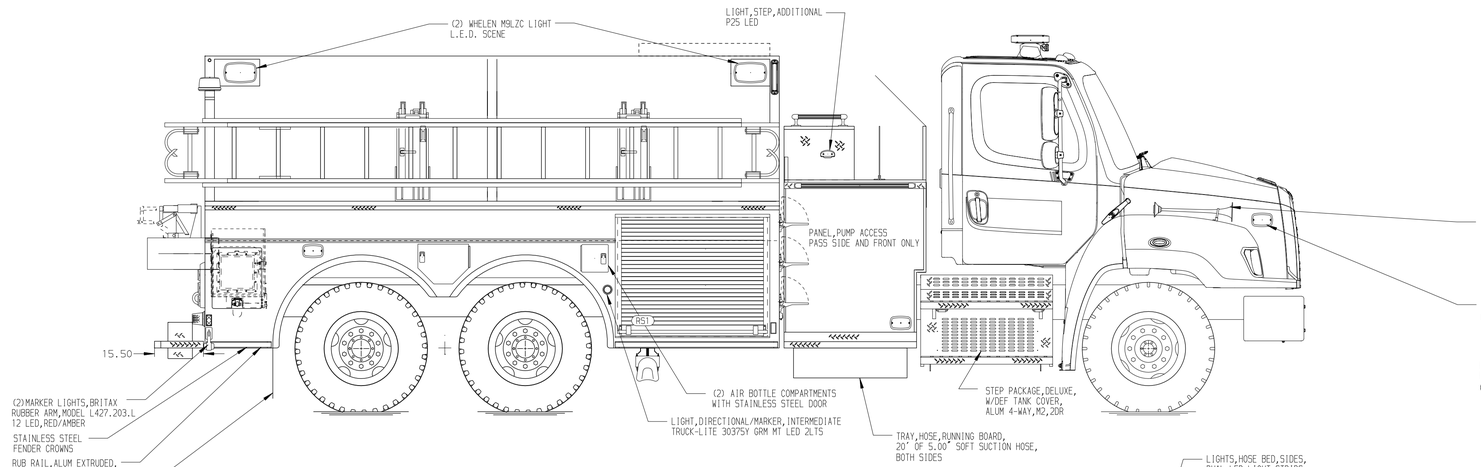

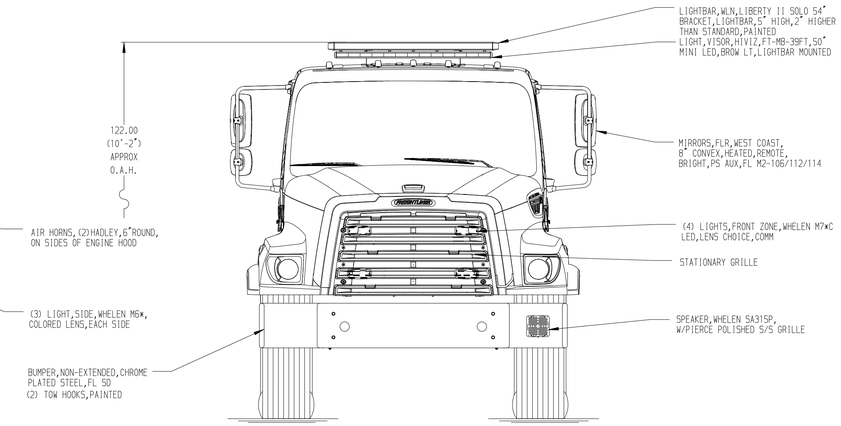

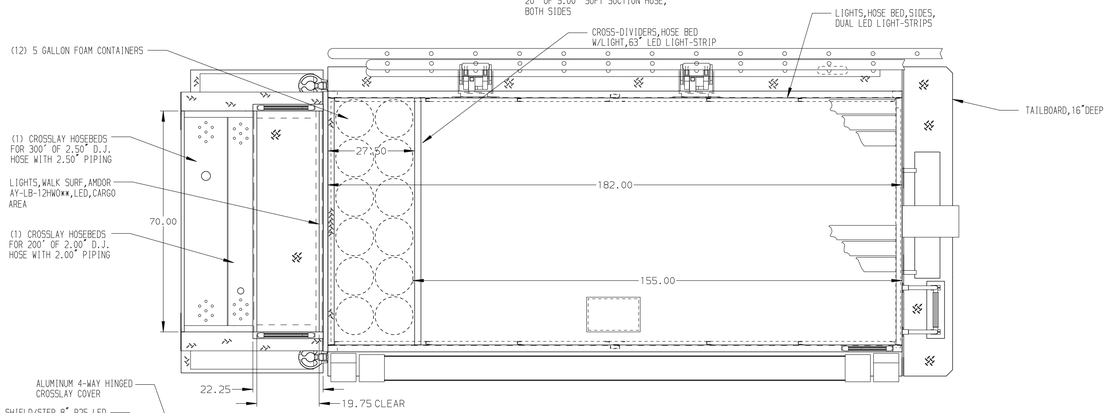

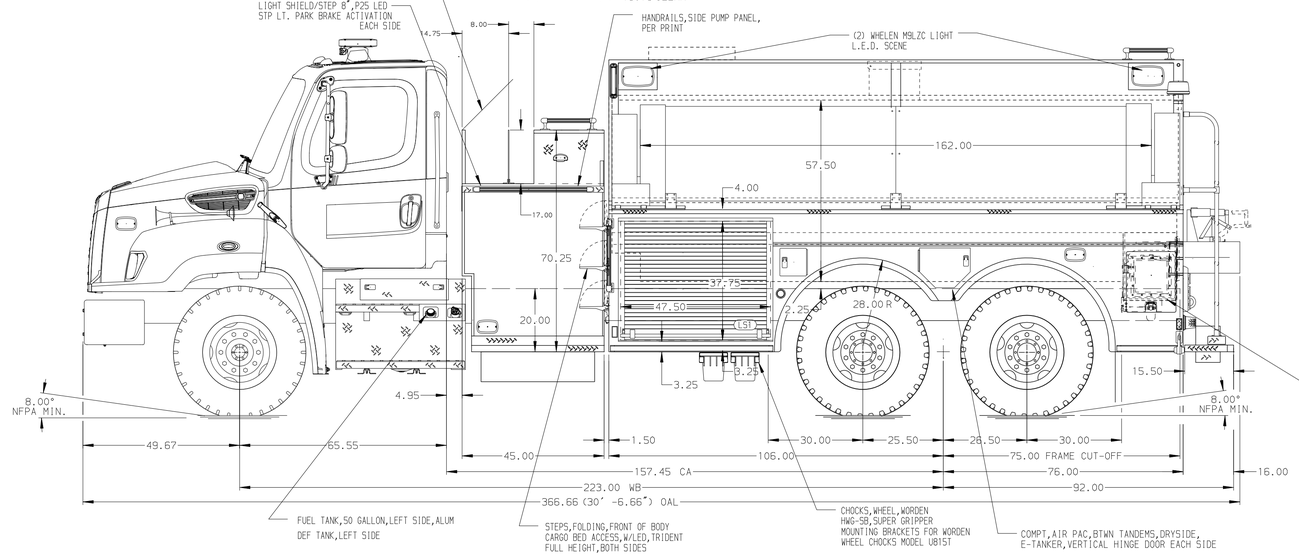

HOSEBED CAPACITIES
(1) 1600' OF 3.00" D.J. POLYESTER HOSE

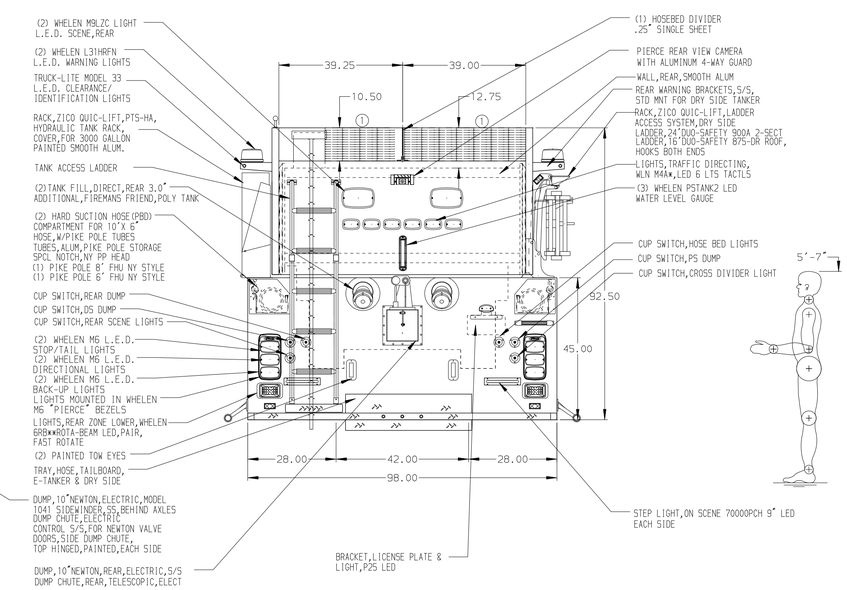

ALUMINUM BODY

MAXIMUM O.A.L. 374.50"

MAXIMUM O.A.H. 122"

NOTE

DIMENSIONS SHOWN ARE APPROXIMATE AND ARE SUBJECT TO MINOR DEVIATIONS AS MAY OCCUR OR BE NECESSARY IN CONSTRUCTION.
MINOR DETAILS NOT SHOWN.

REV	DATE	BY	CH
3	21NOV23	VHO	CCS
2	27SEP23	RWR	CCS
1	21JUL23	RHU	AJA

CHASSIS DATA
MAKE: FL
MODEL: 114SD

Pierce MANUFACTURING INC.
BRADENTON, FLORIDA

TITLE: 1250-D-2500 POLY,182"BODY,DRYSIDE
45"SIDE CONTROL,(1)1.5"&(1)2.5"CROSSLAYS

FOR: GOOCHLAND COUNTY FIRE
GOOCHLAND COUNTY VIRGINIA

DWG NO.: 38857AD

JOB NO.	38857
SCALE	1:24
DATE	
DRAWN BY	RHU
29JUN23	
CHECKED BY	AJA
05JUL23	
SHEET SIZE	D
SHEET NO.	1 OF 1

View File Created 22-NOV-2023 08:49:11