PUMPER

BODY
Long Aluminum 2nd Gen Pumper

CHASSIS
Enforcer Chassis

CHASSIS

AXLE, FRONT, CUSTOM
19,500 lb TAK-4 Axle

AXLE, REAR
24,000 lb Dana Axle

ENGINE
450 HP Cummins L9 Engine

TRANSMISSION
Allison 6th Gen, 3000 EVS P

BUMPER
19" Extended Painted Steel

CAB
6010 Enforcer Cab

BODY

WATER TANK
750 Gallon Poly Water Tank

COMPT, PUMPER, REAR
51.25" FF Rollup Rear Compt

COMPT, PUMPER, LEFT SIDE
161" Rollup Full Height & Depth Front & Rear

COMPT, PUMPER, RIGHT SIDE
161" Rollup Full Height Front & Rear FDLER

FIRE SUPPRESSION

PUMPHOUSE
48" Control Zone Side Mount

PUMP
1500 GPM Waterous CSU

CROSSLAYS, 1.50"
(2) 1.50" Standard Capacity

CROSSLAYS, 2.50"
2.50" Crosslay Not Required

SPEEDLAYS
Speedlays Not Required

GENERATOR
Generator Not Required

Foam System
Husky 3 Single Agent Foam System

Foam Cell
20 Gallon Foam Cell, Reduced Water

Side Roll and Frontal Impact Protection

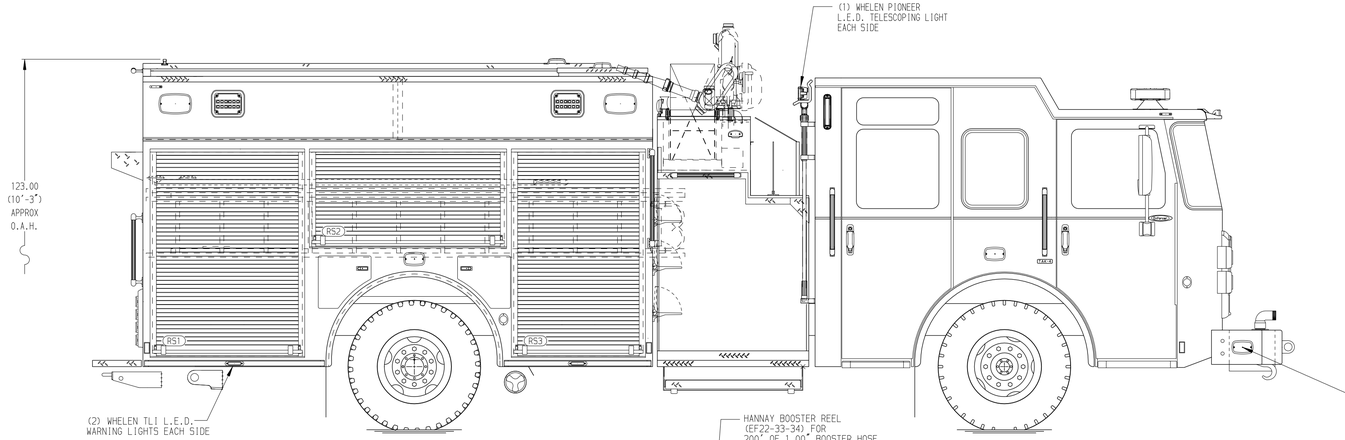

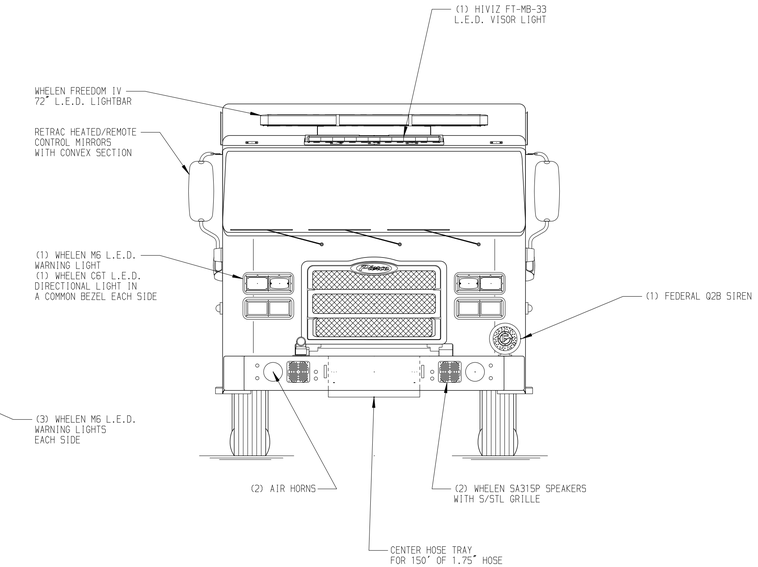

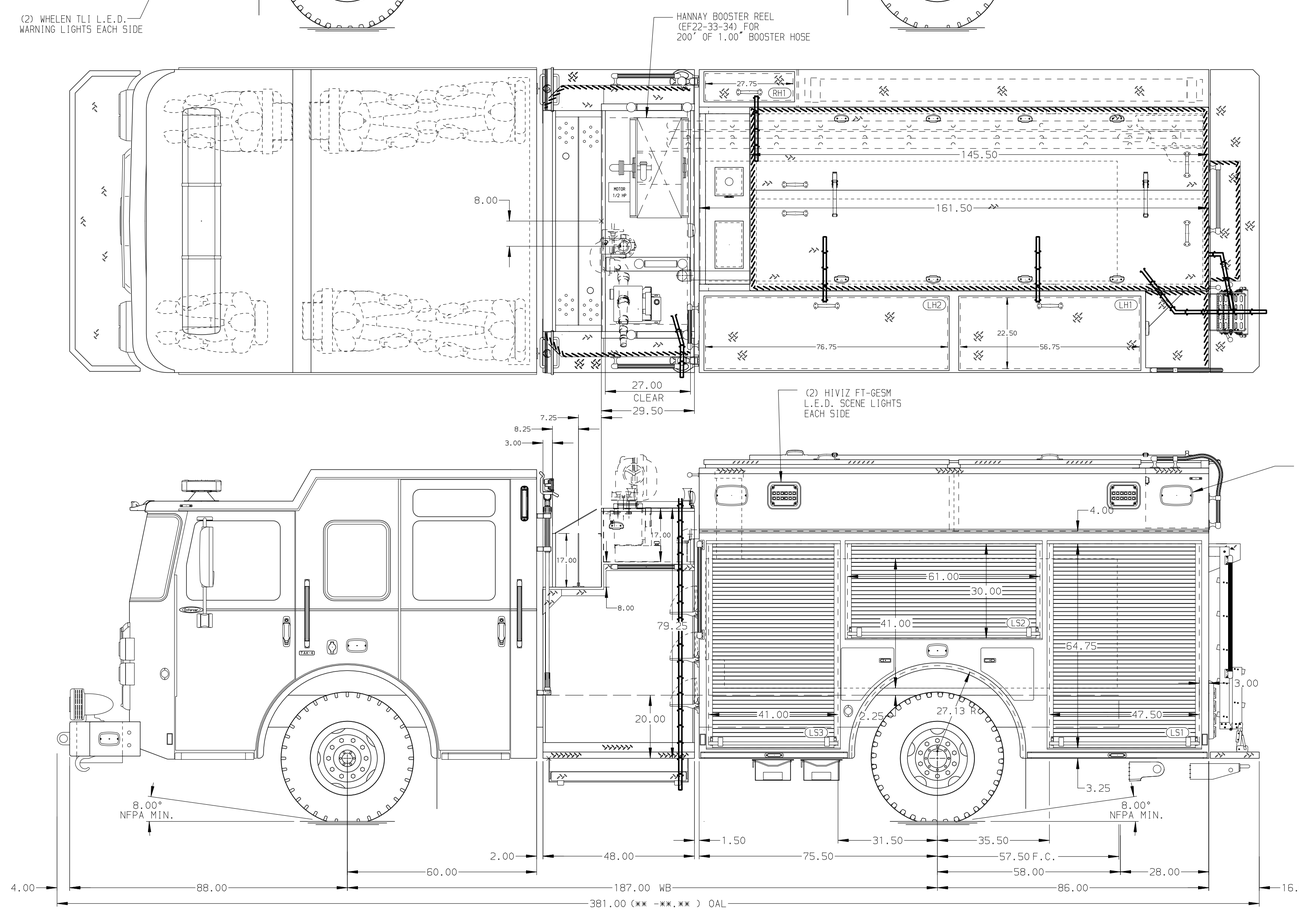

HOSEBED CAPACITY

BED 1
600' OF 3.00" D.J. POLY HOSE

BED 2
1000' OF 5.00" D.J. POLY HOSE

BED 3
400' OF 2.50" D.J. POLY HOSE

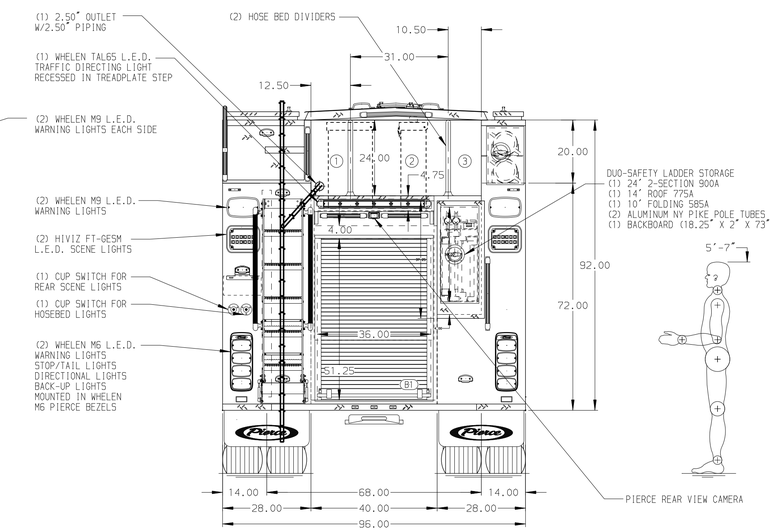

NOTE

DIMENSIONS SHOWN ARE APPROXIMATE AND ARE SUBJECT TO MINOR DEVIATIONS AS MAY OCCUR OR BE NECESSARY IN CONSTRUCTION.
MINOR DETAILS NOT SHOWN.

1. ONE 1.50 OUTLET WITH 2.00 PIPING AND SWIVEL LOCATED ON TOP BUMPER RIGHT SIDE
2. SHORELINE RECEPTACLE WITH KUSSMAUL SUPER AUTO-EJECT LOCATED ON DRIVER SIDE OF THE CAB
3. AIR INLET WITH DISCONNECT COUPLING IN THE DRIVER SIDE STEPWELL
4. BATTERY CHARGER LOCATED IN COMPARTMENT PER SHOP ORDER
5. BATTERY CHARGE INDICATOR LOCATED ON THE DRIVER SIDE SEAT RISER
6. NINE ADJUSTABLE SHELVES IN COMPARTMENTS PER SHOP ORDER
7. FOUR FLOOR MOUNTED SLIDE-OUT TRAY IN COMPARTMENT PER SHOP ORDER
8. ONE TILT/SLIDE-OUT TRAY LOCATED IN COMPARTMENT PER SHOP ORDER
9. ONE SWING-OUT TOOLBOARD LOCATED IN COMPARTMENT PER SHOP ORDER
10. ONE TOOLBOARD ADDED TO SLIDE-OUT TRAY LOCATED IN COMPARTMENT PER SHOP ORDER
11. SEVEN RECEPTACLES LOCATED PER SHOP ORDER

REV	DATE	BY	CH
V	11DEC23	MMF	AST

CHASSIS DATA	TITLE	Pierce Pumper Approval Drawing -	JOB NO. 38861
MAKE PIERCE	FOR	Gulf Shores Fire Rescue -	SCALE 1:24 / DATE
MODEL ENFORCER	DWG NO.	38861AD	DRAWN BY WRE / 28AUG23
			CHECKED BY MMF / 18SEP23
			SHEET SIZE D / SHEET NO. 1 OF 1

Pierce MANUFACTURING INC.

View File Created 15-DEC-2023 14:15:26