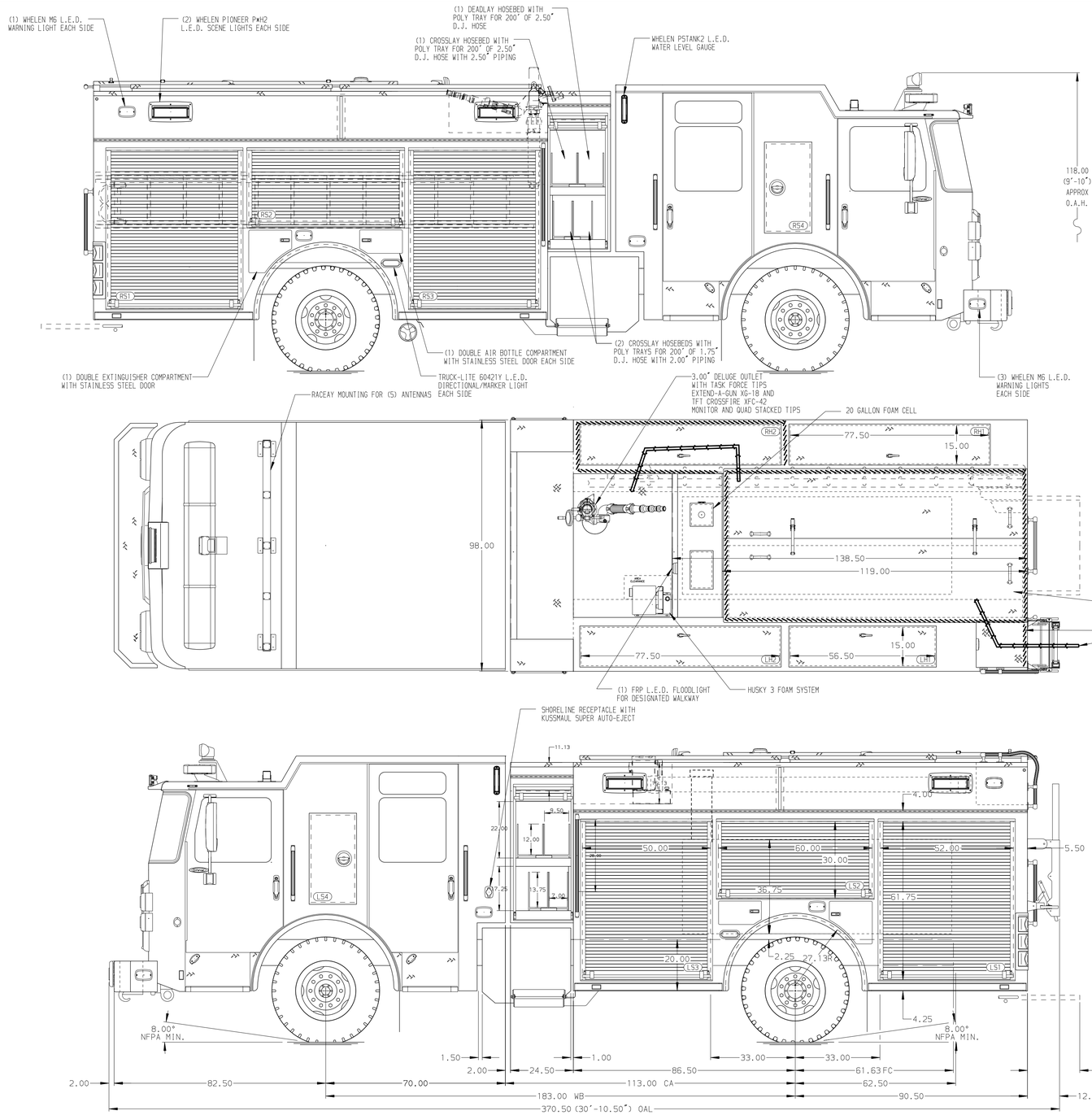

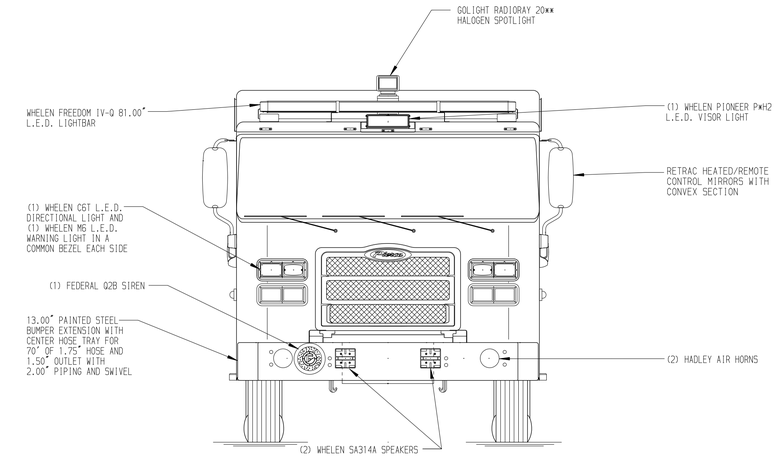

HOSEBED CAPACITIES

1. 200' OF 2.50" D.J. POLY HOSE
2. 400' OF 2.50" D.J. POLY HOSE
3. 1200' OF 4.00" D.J. POLY HOSE

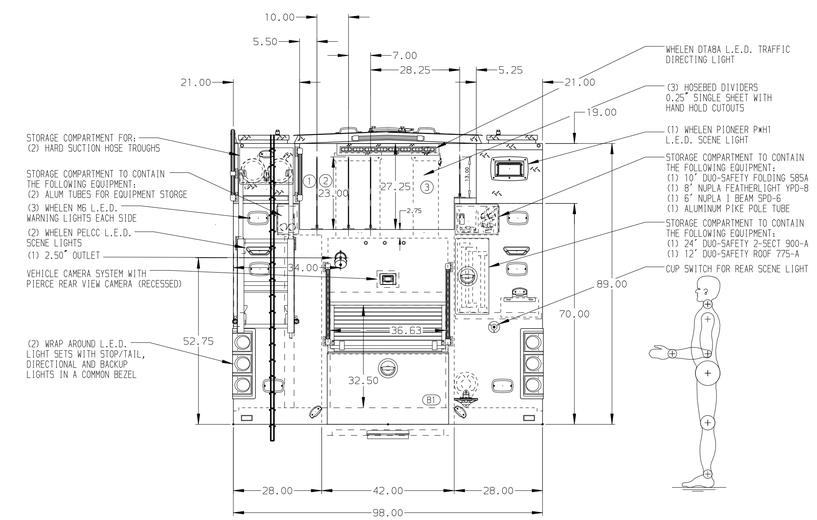

ALUMINUM BODY

MAXIMUM O.A.H. 118.00"

SIDE ROLL AND FRONTAL IMPACT PROTECTION

NOTE

DIMENSIONS SHOWN ARE APPROXIMATE AND ARE SUBJECT TO MINOR DEVIATIONS AS MAY OCCUR OR BE NECESSARY IN CONSTRUCTION.
MINOR DETAILS NOT SHOWN.

1. TWO WORDEN HWG-SB SUPER GRIPPER WHEEL CHOCKS WITH MOUNTING BRACKETS CTF
2. AIR INLET WITH DISCONNECT COUPLING LOCATED PER ORDER
3. AIR OUTLET WITH SHUT OFF VALVE LOCATED PER ORDER
4. KUSSMAUL BATTERY CHARGER LOCATED PER ORDER
5. BATTERY CHARGER INDICATOR LOCATED PER ORDER
6. L.E.D. DUAL LIGHT STRIPS LOCATED IN HOSE BED PER ORDER
7. SIX PULL STRAPS WITH SPECIAL LENGTHS LOCATED PER ORDER
8. EIGHT FULL WIDTH/DEPTH ADJUSTABLE SHELVES LOCATED PER ORDER
9. ONE ADJUSTABLE TILTING SLIDE-OUT TRAY LOCATED PER ORDER
10. THREE FLOOR MOUNTED SLIDE-OUT TRAYS LOCATED PER ORDER
11. SLIDE-OUT TOOL BOARD WITH PEGBOARD PATTERN LOCATED PER ORDER
12. TWO VERTICAL PARTITIONS LOCATED PER ORDER
13. ALUMINUM PEGBOARD ON BACK WALL LOCATED PER ORDER

REV	DATE	BY	CH
7	13AUG24	KLE	GKH
6	25JUL24	KLE	GKH
5	13MAR24	RIR	GKH
4	01FEB24	KLE	GKH
3	16NOV23	KLE	SJS

CHASSIS DATA
MAKE: PIERCE
MODEL: ENFORCER

Pierce MANUFACTURING INC.

TITLE: 1500-D-520P, 500G WATER W/20G FOAM, 177" RESCUE (3)CROSSLAYS, DELUGE, HUSKY 3, LADDERS THRU BODY

FOR: SEDONA FIRE DISTRICT, SEDONA, ARIZONA

DWG NO.: 38871AD

JOB NO.	38871 01-02
SCALE	1:24
DATE	
DRAWN BY	KLE
DATE	07NOV23
CHECKED BY	SJS
DATE	08NOV23
SHEET SIZE	D
SHEET NO.	1 OF 1

View File Created 14-AUG-2024 10:39:41