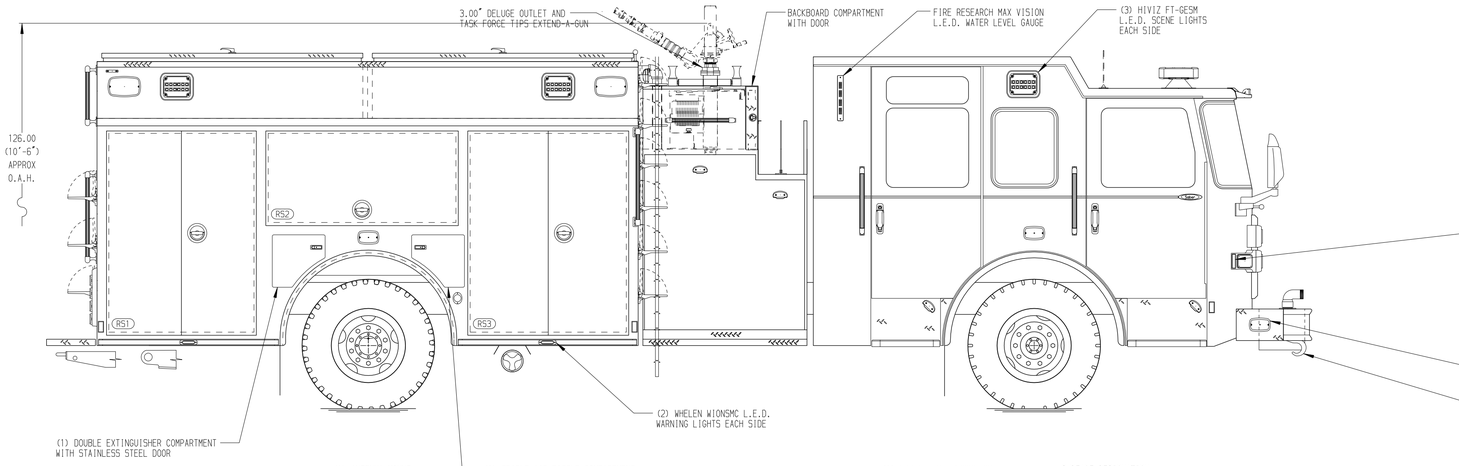

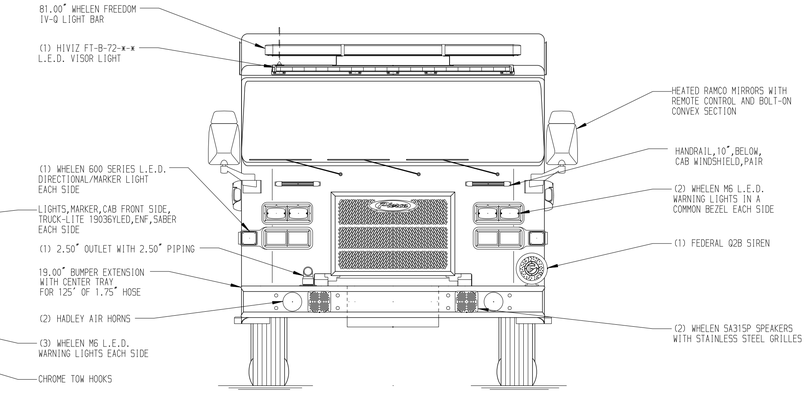

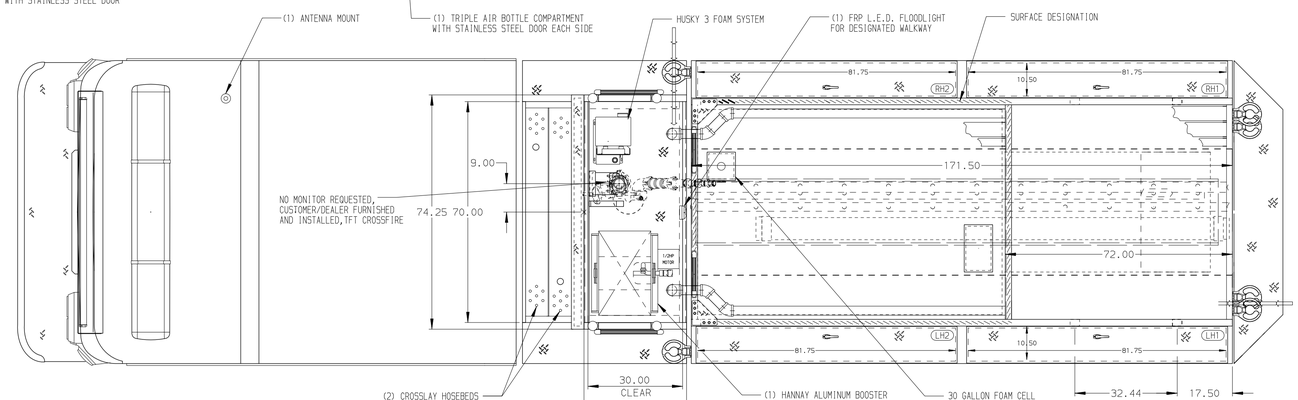

HOSEBED CAPACITIES

1. 200' OF 2.50" D.J. POLY HOSE
2. 1000' OF 5.00" D.J. POLY HOSE
3. 600' OF 3.00" D.J. POLY HOSE
4. 200' OF 2.50" D.J. POLY HOSE

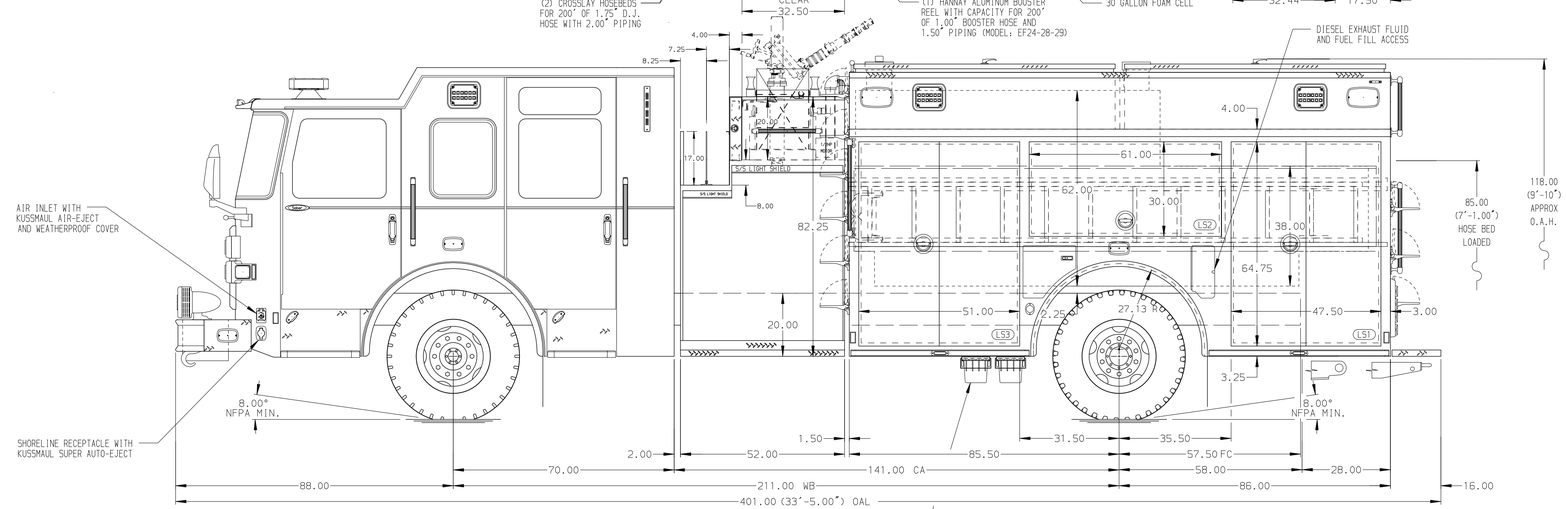

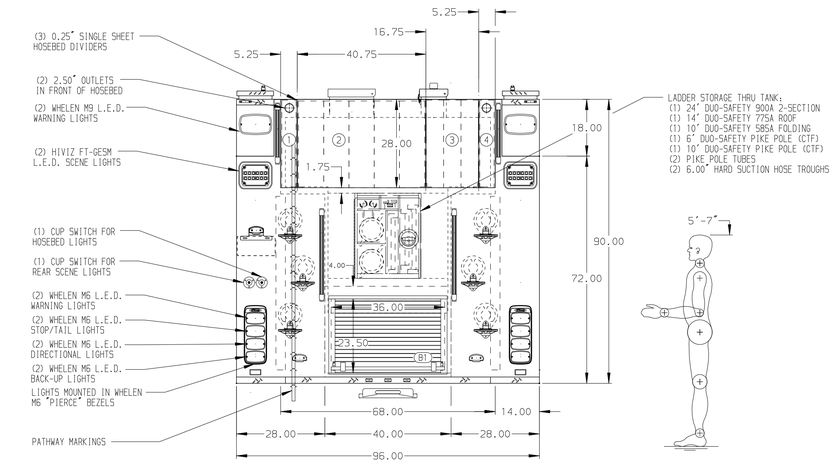

ALUMINUM BODY

NOTE

DIMENSIONS SHOWN ARE APPROXIMATE AND ARE SUBJECT TO MINOR DEVIATIONS AS MAY OCCUR OR BE NECESSARY IN CONSTRUCTION.
MINOR DETAILS NOT SHOWN.

REV	DATE	BY	CH
7	12OCT23	RWR	CCS
6	11AUG23	VHO	CCS
5	16MAY23	KLE	CCS
4	17MAR23	RHU	CCS
3	12JAN23	CDU	CZA

CHASSIS DATA
MAKE: PIERCE
MODEL: SABER FR

Pierce MANUFACTURING INC.

TITLE: 1500-D-1000P,970G WATER,30G FOAM,171" FH/FD W/ NOTCH LADDERS THRU TANK,(2) CROSSLAYS,DELUGE,HUSKY 3

FOR: NICHOLS FIRE PROTECTION DISTRICT
SHEPHERDSVILLE, KENTUCKY

DWG NO.: 39043AD

JOB NO.	39043
SCALE 1:24	DATE
DRAWN BY ARI	16DEC22
CHECKED BY CDU	16DEC22
SHEET SIZE D	SHEET NO. 1 OF 1

View File Created 18-OCT-2023 14:48:23