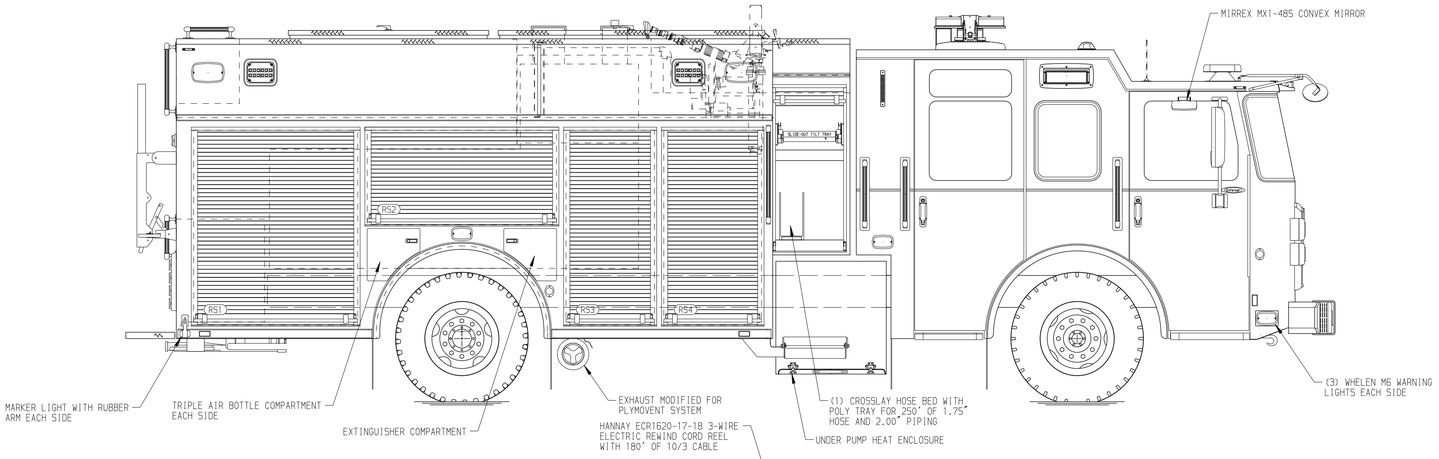

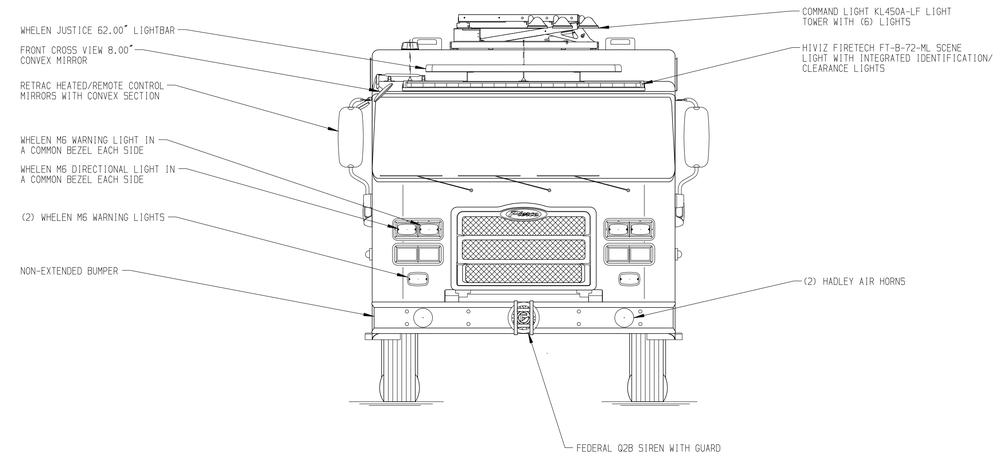

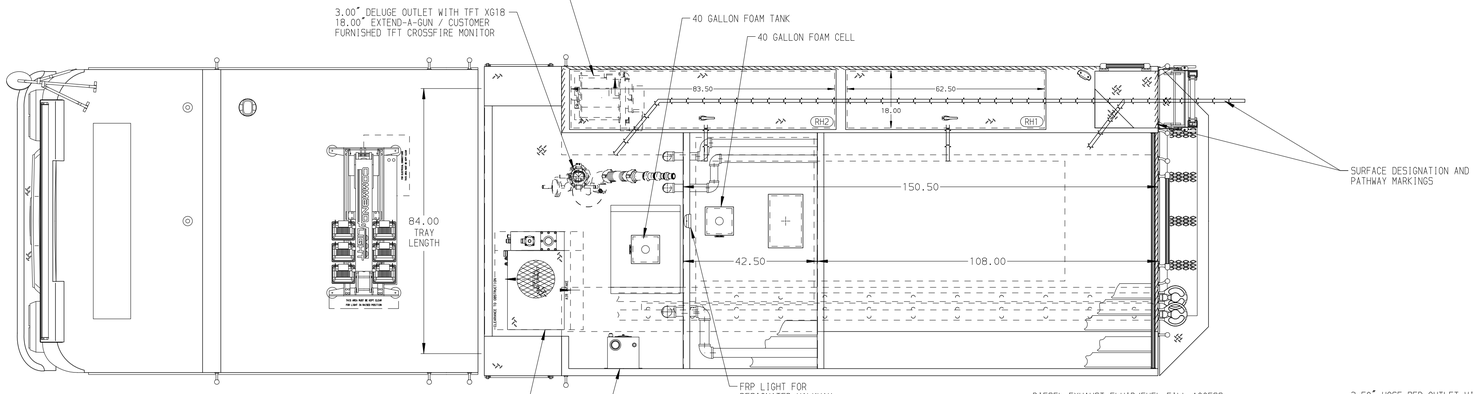

HOSEBED CAPACITIES

1. 200' OF 2.50" D.J. POLY HOSE (PRE-CONNECTED)
2. 500' OF 2.50" D.J. POLY HOSE
3. 500' OF 2.50" D.J. POLY HOSE WITH 150' OF 1.75" D.J. POLY HOSE ON TOP
4. 1000' OF 4.00" D.J. POLY HOSE
5. 250' OF 1.75" D.J. POLY HOSE (PRE-CONNECTED)
6. 250' OF 1.75" D.J. POLY HOSE (PRE-CONNECTED)

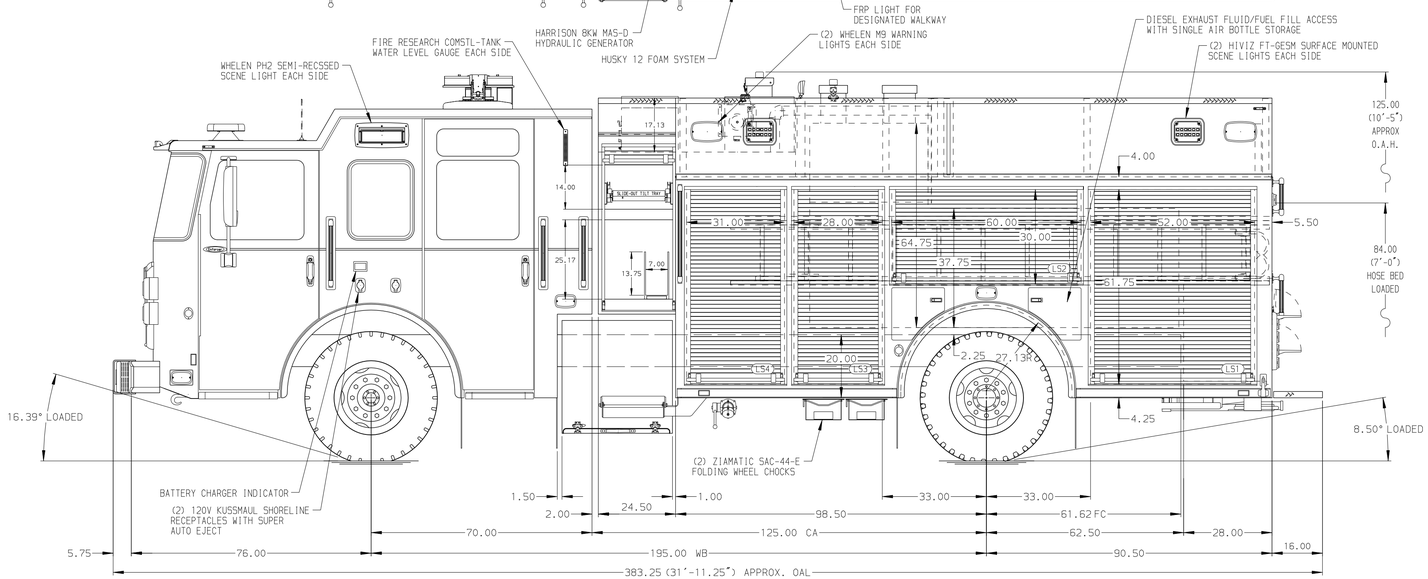

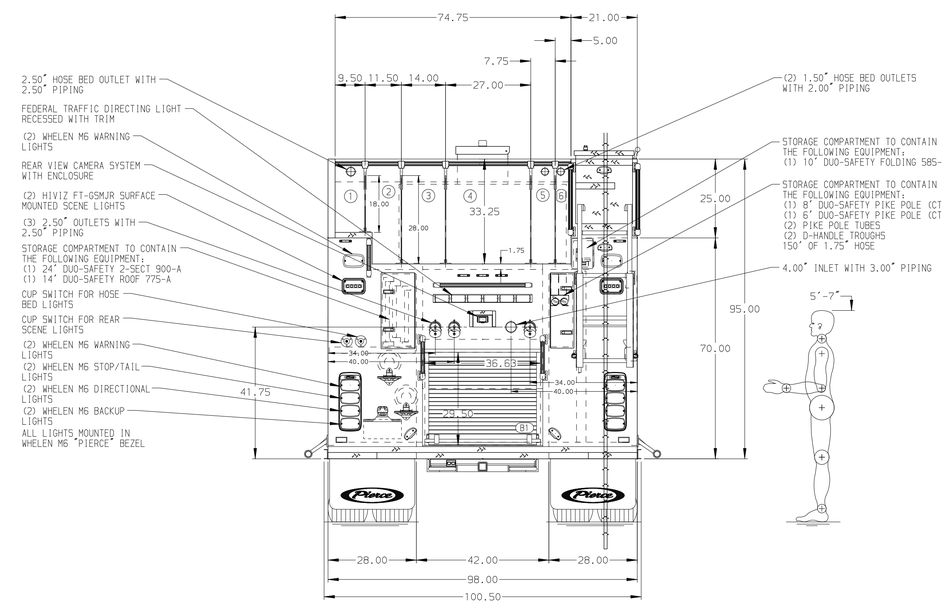

(ALUMINUM BODY) (MAXIMUM O.A.W. 101.00") (MAXIMUM O.A.L. 384.00")

NOTE

DIMENSIONS SHOWN ARE APPROXIMATE AND ARE SUBJECT TO MINOR DEVIATIONS AS MAY OCCUR OR BE NECESSARY IN CONSTRUCTION.
MINOR DETAILS NOT SHOWN.

1. AIR INLET WITH DISCONNECT FITTING LOCATED PER ORDER
2. AIR OUTLET WITH SHUT OFF VALVE LOCATED PER ORDER
3. BATTERY CHARGER LOCATED PER ORDER
4. TWO 120V DUPLEX RECEPTACLES LOCATED IN CAB PER ORDER

REV	DATE	BY	CH
D	09FEB24	BST	JJR
C	05FEB24	BST	JJR
B	19DEC23	BST	JJR
A	03NOV23	BST	JJR

CHASSIS DATA
MAKE: PIERCE
MODEL: ENFORCER

Pierce MANUFACTURING INC.

TITLE: 1500-D-790P,750 GAL WATER W/40 GAL FOAM CELL,DELUGE 189"PUC RESCUE BODY,40 GAL FOAM TANK,HUSKY 12
FOR: QUEBEC FIRE DEPARTMENT QUEBEC,QUEBEC CANADA
DWG NO.: 39106AD-SH1

JOB NO.	39106
SCALE 1:24	DATE
DRAWN BY BST	240CT23
CHECKED BY JJR	250CT23
SHEET SIZE D	SHEET NO. 1 OF 2

View File Created 09-FEB-2024 12:41:07