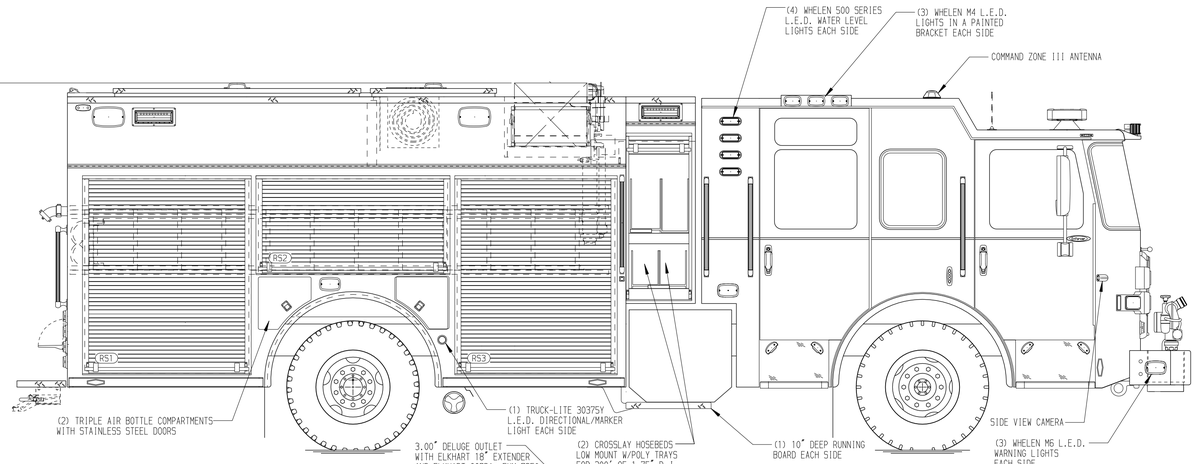

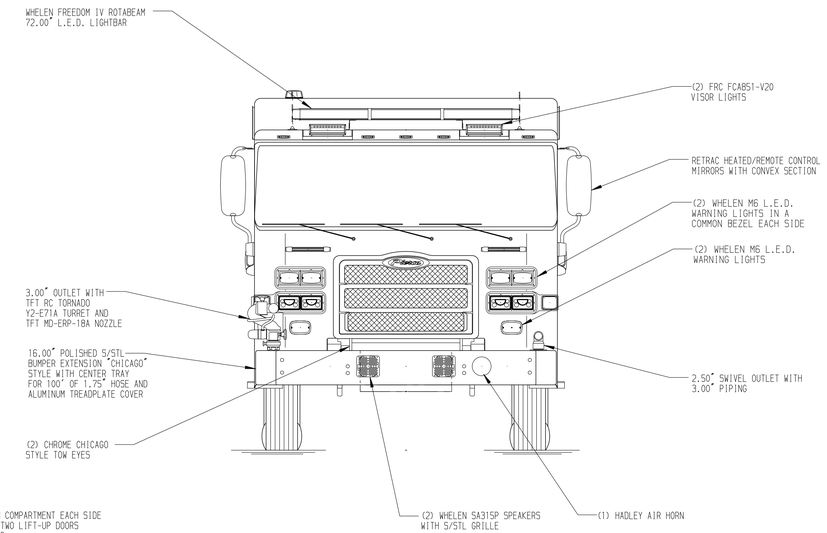

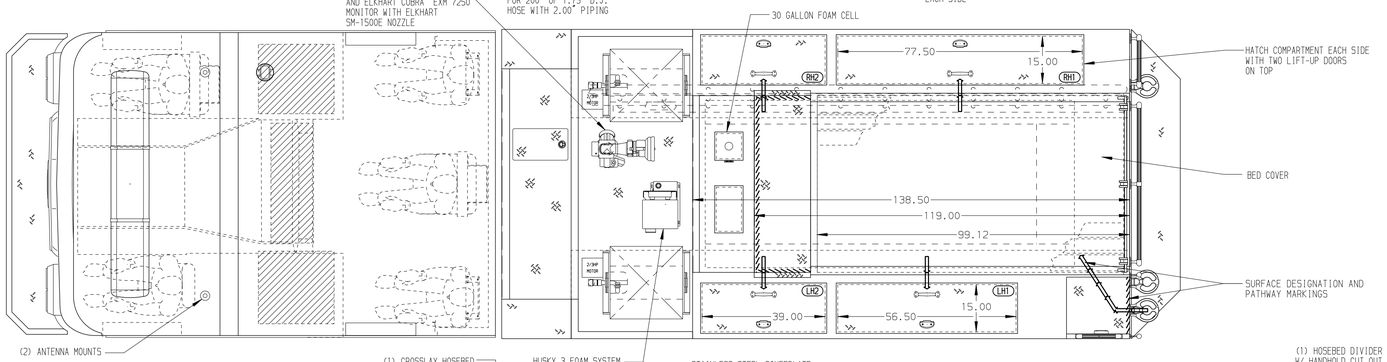

HOSEBED CAPACITIES

1. 750' OF 4.00" D.J. POLY HOSE
2. 750' OF 2.50" D.J. POLY HOSE

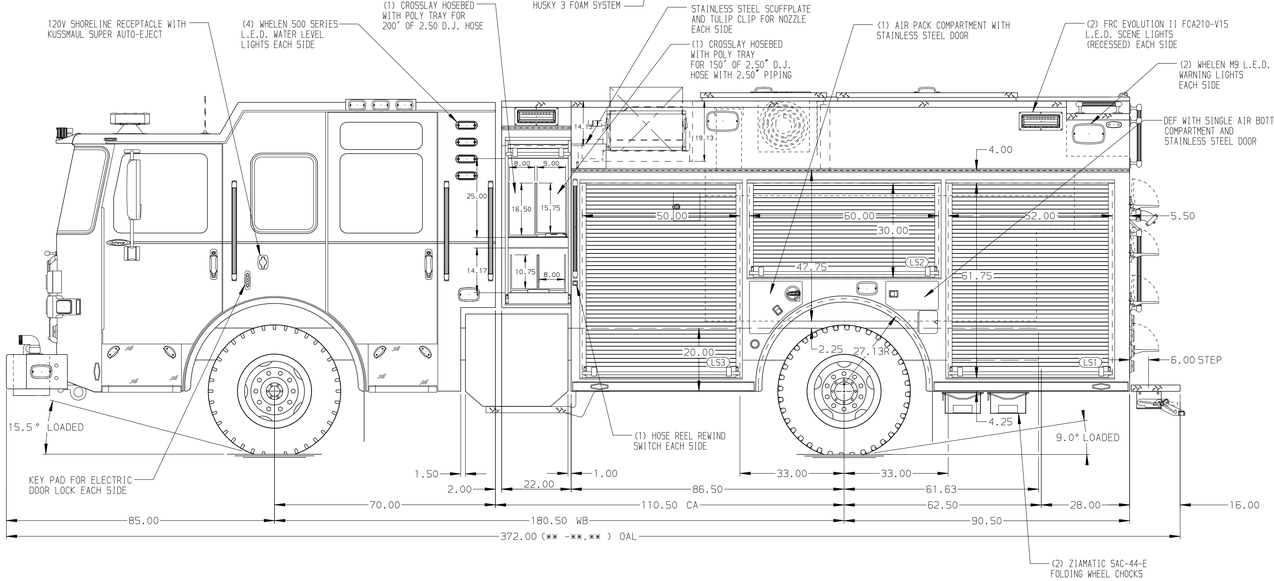

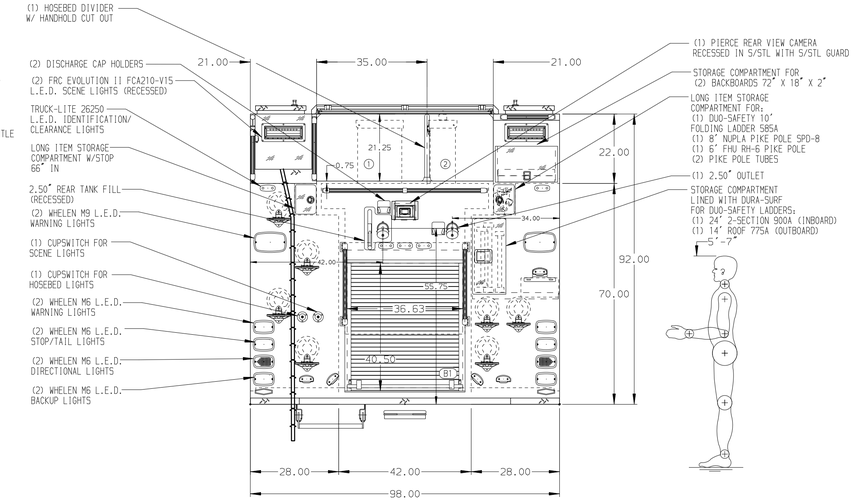

OVERALL HEIGHT - 122.00"	OVERALL WIDTH - 117.75"	BODY MATERIAL - ALUMINUM
MAX OAL - 372.00"	WHEELBASE - 180.50"	CAB TO AXLE - 110.50"

ALUMINUM BODY

MAXIMUM O.A.L. 372.00"

MAXIMUM O.A.H. 122.00"

Pierce MANUFACTURING INC.

JOB NO.	39120
SCALE	1:24
DATE	
TITLE	1500-D-780,750 GAL WATER W/30 GAL FOAM, 177" RESCUE (4)XLAYS, DELUGE, BOOSTER REELS, LADDERS THRU BODY
FOR	COUNTY OF MAUI FIRE DEPARTMENT MAUI, HAWAII
DRAWN BY	LME 06JAN23
CHECKED BY	NPE 06JAN23
SHEET SIZE	D
SHEET NO.	1 OF 2
DWG NO.	39120AD-SH1

REV	DATE	BY	CH
2	02NOV23	KLE	NPE
1	14SEP23	LME	NPE

CHASSIS DATA
MAKE: PIERCE
MODEL: ENFORCER

NOTE

DIMENSIONS SHOWN ARE APPROXIMATE AND ARE SUBJECT TO MINOR DEVIATIONS AS MAY OCCUR OR BE NECESSARY IN CONSTRUCTION.
MINOR DETAILS NOT SHOWN.

1. S/STL SCUFFPLATE ON EACH CAB DOOR JAMB
2. BATTERY CHARGER LOCATED BEHIND DRIVERS ON CAB EMS COMPARTMENT
3. BATTERY CHARGE INDICATOR LOCATED ON DRIVER'S SEAT RISER
4. PULL STRAPS W/FOOTMAN LOOPS FOR SIDE COMPARTMENT DOORS INCLUDING CROSSLAY DOORS
5. 12V L.E.D. LIGHT STRIPS LOCATED IN HOSEBED
6. S/STL SCUFFPLATE ON FRONT BULKHEADS
7. S/STL SCUFFPLATE AROUND DEF AND FUEL FILL OPENINGS
8. S/STL SCUFFPLATE ON FRONT CORNERS OF BODY
9. S/STL SCUFFPLATE AROUND AIR BOTTLE COMPARTMENT OPENINGS
10. S/STL SCUFFPLATE ON THE FRONT FACE OF THE CROSSLAY AREA
11. S/STL SCUFFPLATE ON VERTICAL SURFACES OF REAR STEP AREA OF HATCH
12. TWO HANNAY BOOSTER REELS MODEL SBEF30-23-24 LOCATED IN CARGO AREA EACH WITH 150' OF 1.00" BOOSTER HOSE
13. S/STL SCUFFPLATES REAR CAB CORNERS
14. S/STL SCUFFPLATES REAR BODY CORNERS

View File Created 07-NOV-2023 10:08:24