PUMPER

BODY
Long Aluminum 2nd Gen Pumper

CHASSIS
Enforcer Chassis

CHASSIS

AXLE, FRONT, CUSTOM
20,000 lb Dana Axle

AXLE, REAR
27,000 lb Dana Axle

ENGINE
450 HP Cummins L9 Engine

TRANSMISSION
Allison 6th Gen, 3000 EVS P

BUMPER
19" Extended Stainless Steel

CAB
6010 Enforcer Cab

BODY

WATER TANK
1000 Gallon New York Style Water Tank

COMPT, PUMPER, REAR
23.50" FF Rollup Rear Compt

COMPT, PUMPER, LEFT SIDE
171" Rollup Full Height & Depth Front & Rear

COMPT, PUMPER, RIGHT SIDE
171" Rollup Full Height Front & Rear FDLER

FIRE SUPPRESSION

PUMPHOUSE
45" Control Zone Side Mount

PUMP
1500 GPM Waterous QMAX-150

CROSSLAYS, 1.50"
(2) 1.50" Standard Capacity

CROSSLAYS, 2.50"
(1) 2.50" Standard Capacity

SPEEDLAYS
Speedlays Not Required

GENERATOR
Generator Not Required

Foam System
Foam System Not Required

Foam Cell
Foam Cell Not Required

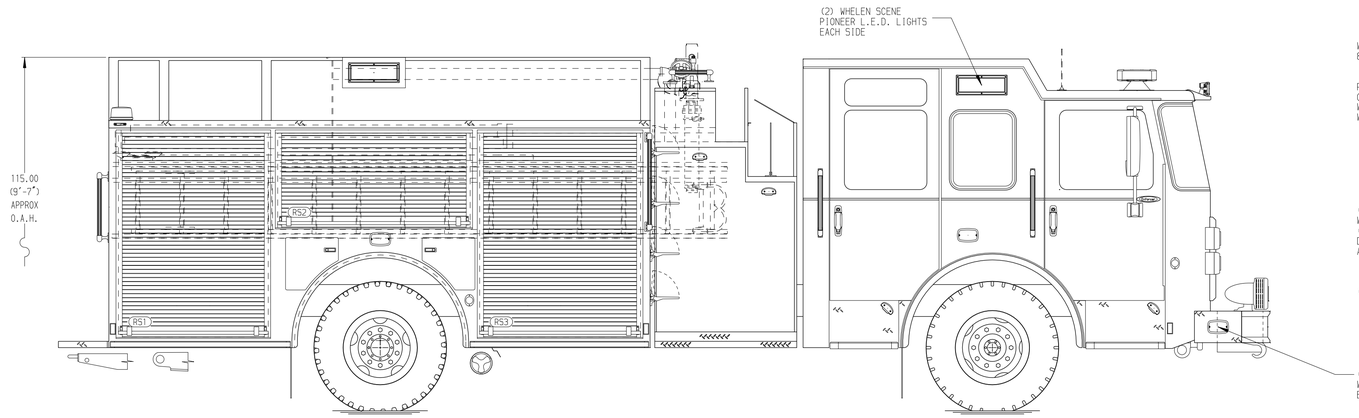

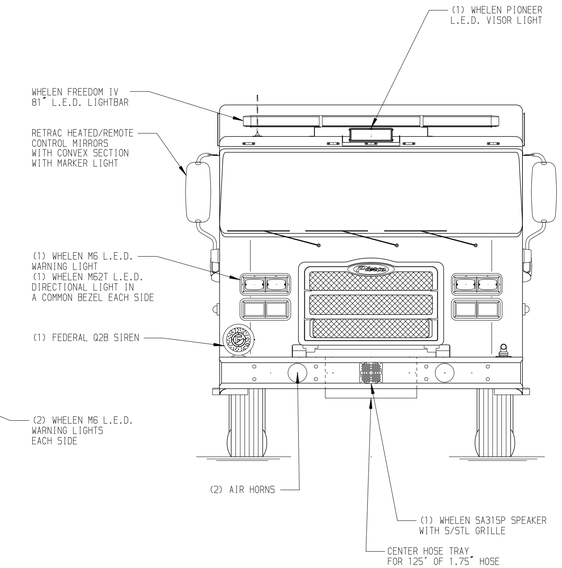

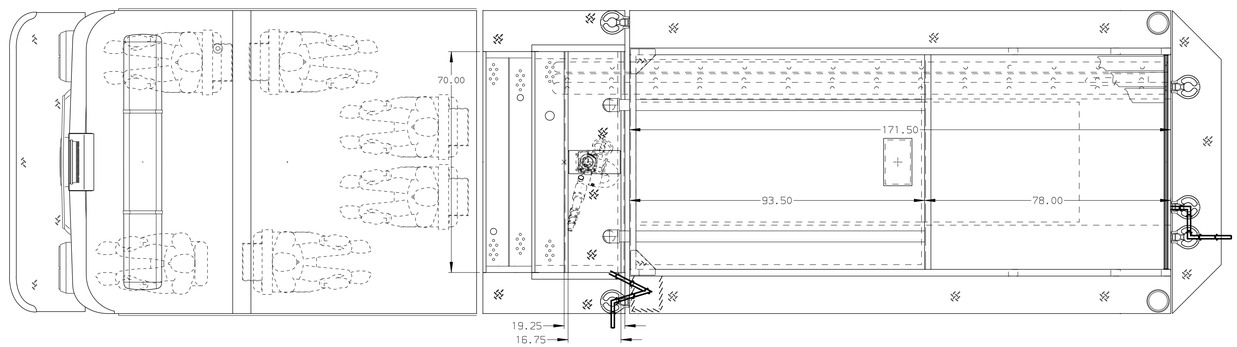

HOSEBED CAPACITY

BED 1
300' OF 3.00" D.J. POLY HOSE

BED 2
1000' OF 5.00" D.J. POLY HOSE

BED 3
300' OF 3.00" D.J. POLY HOSE

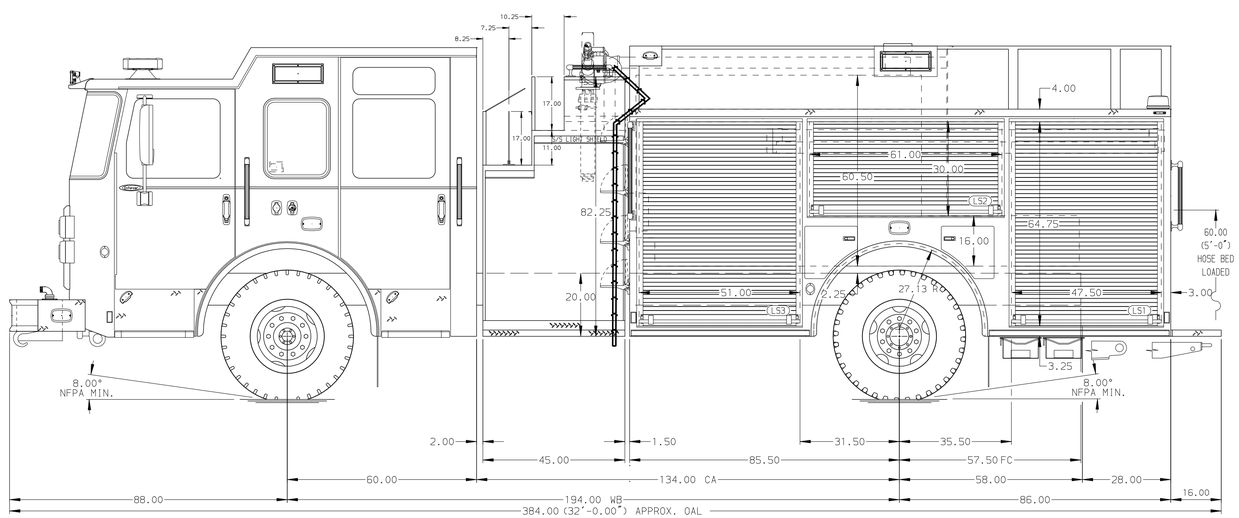

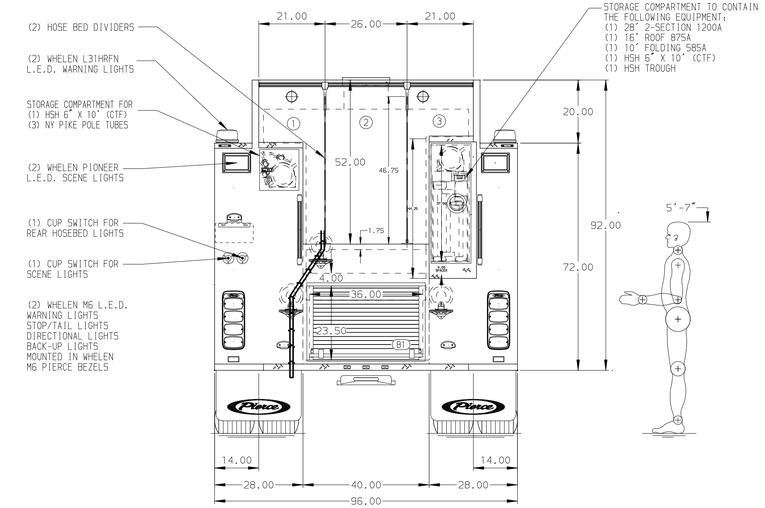

NOTE

DIMENSIONS SHOWN ARE APPROXIMATE AND ARE SUBJECT TO MINOR DEVIATIONS AS MAY OCCUR OR BE NECESSARY IN CONSTRUCTION.
MINOR DETAILS NOT SHOWN.

1. ONE 1.50 OUTLET WITH 2.00 PIPING AND SWIVEL LOCATED ON TOP BUMPER LEFT SIDE
2. SHORELINE RECEPTACLE WITH KUSSMAUL SUPER AUTO-EJECT LOCATED ON DRIVER SIDE OF THE CAB
3. AIR INLET WITH KUSSMAUL AIR EJECT LOCATED ON THE DRIVER SIDE CAB
4. BATTERY CHARGER LOCATED PER ORDER
5. BATTERY CHARGER INDICATOR LOCATED ON DRIVER SIDE THROUGH WINDOW

REV	DATE	BY	CH
C	12FEB24	MMF	CSH
B	17NOV23	MMF	CSH
A	08SEP23	MMF	CSH

CHASSIS DATA
MAKE: PIERCE
MODEL: ENFORCER

Pierce MANUFACTURING INC.

TITLE: Pierce Pumper Approval Packet
FOR: Town of Morris CT
DWG NO.: 39166AD-SH1

JOB NO. 39166
SCALE 1:24
DATE
DRAWN BY WRE 10JUL23
CHECKED BY MMF 10JUL23
SHEET SIZE D
SHEET NO. 1 OF 2

View File Created 12-FEB-2024 11:10:26