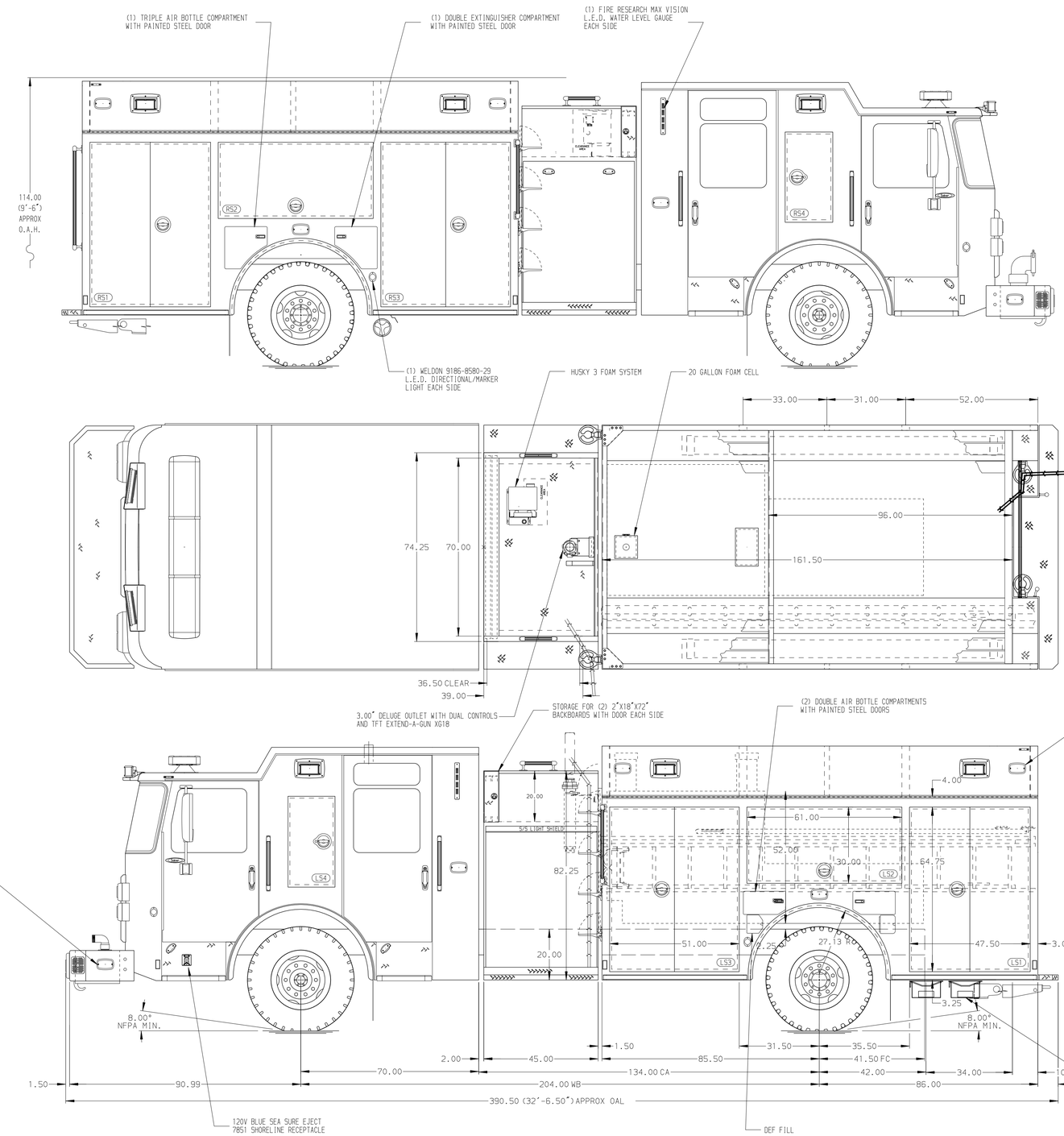

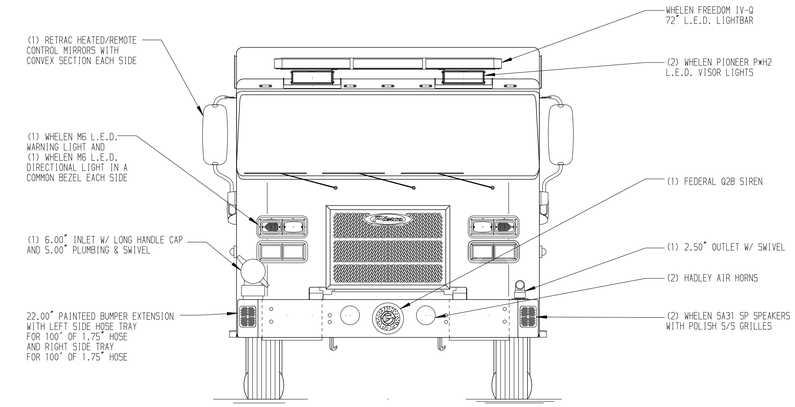

HOSEBED CAPACITIES

1. 6.00" X 10' HARD SUCTION HOSE (CTF)
2. 200' OF 2.50" D.J. POLY HOSE
3. 600' OF 3.00" D.J. POLY HOSE
4. 1000' OF 4.00" D.J. POLY HOSE
5. 200' OF 1.75" D.J. POLY HOSE
6. 200' OF 1.75" D.J. POLY HOSE
7. 6.00" X 10' HARD SUCTION HOSE (CTF)

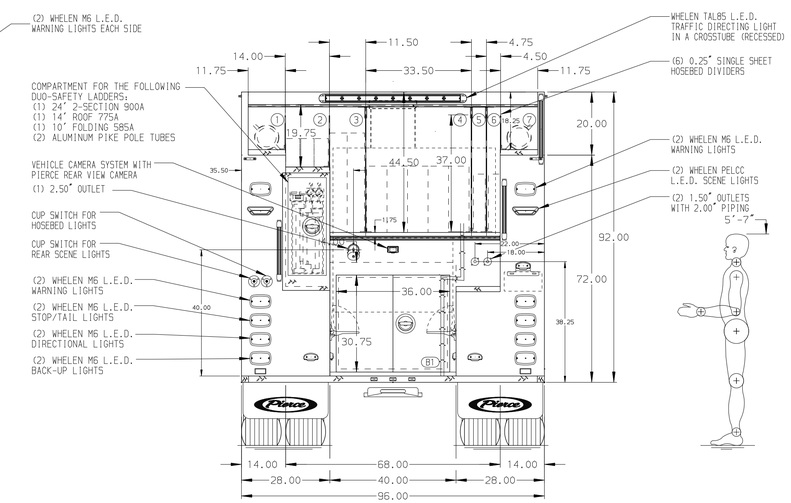

ALUMINUM BODY

NOTE

DIMENSIONS SHOWN ARE APPROXIMATE AND ARE SUBJECT TO MINOR DEVIATIONS AS MAY OCCUR OR BE NECESSARY IN CONSTRUCTION.
MINOR DETAILS NOT SHOWN.

REV	DATE	BY	CH
V	21JUL23	VHO	CCS
V	28APR23	KLE	CCS
V	30JAN23	SDS	CZA

CHASSIS DATA — MAKE: PIERCE — MODEL: SABER FR

Pierce MANUFACTURING INC.

TITLE: 1250-D-750P,730G WATER, 20G FOAM, 171" RESCUE BODY LS BODY LADDER STORAGE, DELUGE, HUSKY 3

FOR: FLAGLER COUNTY FIRE RESCUE BUNNELL, FLORIDA

DWG NO.: 39172AD

JOB NO.	39172
SCALE	1:24
DATE	
DRAWN BY	SDS 12JAN23
CHECKED BY	CZA 18JAN23
SHEET SIZE	D
SHEET NO.	1 OF 1

View File Created 25-JUL-2023 13:07:54