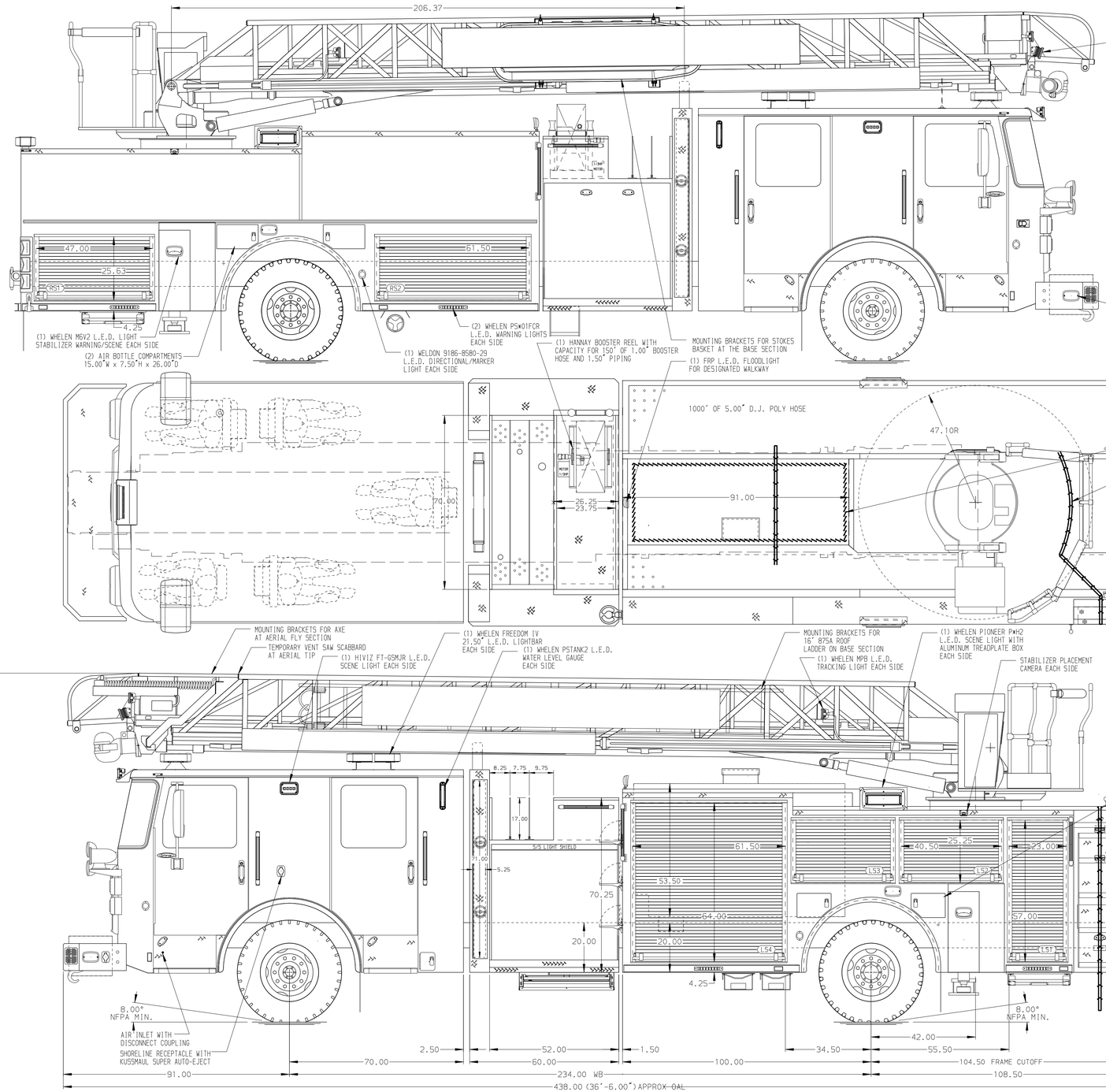

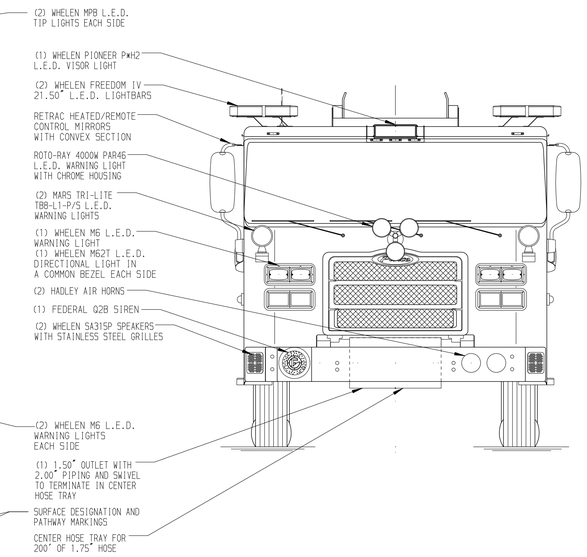

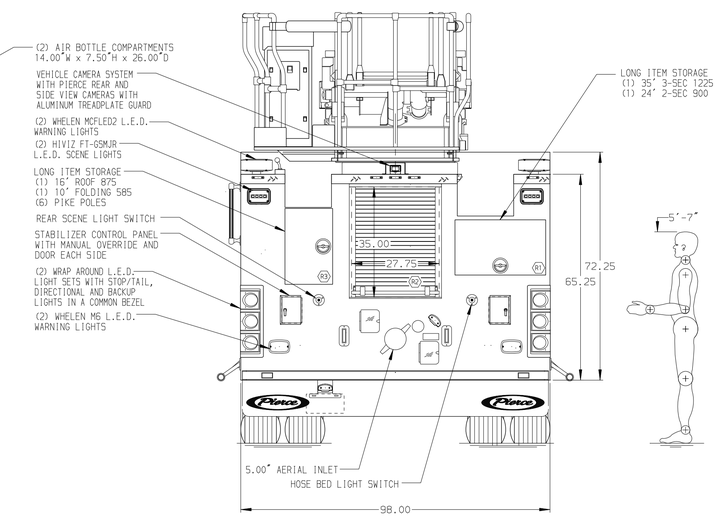

BODY	WATER TANK
75' HAL Aluminum Body	500 Gallon Poly Water Tank
COMPT,LEFT SIDE FRONT	Foam System
Full Height Rollup Forward/Equal Compts	Foam System Not Required
COMPT,LEFT SIDE REAR	Foam Cell
Full Height Rollup Rearward	Foam Cell Not Required
COMPT,RIGHT SIDE FRONT	
Rollup Forward/Single Compt	
COMPT,RIGHT SIDE REAR	
Rollup Rearward/FW Chute	

CHASSIS	CAB	AXLE,FRONT,CUSTOM	TRANSMISSION	PUMPHOUSE	CROSSLAYS,1.50"	SPEEDLAYS	-
Enforcer Chassis	7000 Enforcer Cab	23,000 Lb Dana Axle	ALlison 6th Gen, 4000 EVS P	52" Control Zone Side Mount	(2) 1.50" Standard Capacity	Speedlays Not Required	-
ENGINE	BUMPER	AXLE,REAR		PUMP	CROSSLAYS,2.50"	GENERATOR	-
510 HP Paccar MX13 Engine	22" Ext Painted Steel W/Notch	33,500 Lb Meritor Axle		2000 GPM Waterous CSU	(1) 2.50" Standard Capacity	Generator Not Required	

CUSTOMER APPROVAL

APPROVED BY: _____

DATE: _____

Pierce MANUFACTURING INC.

NOTE

DIMENSIONS SHOWN ARE APPROXIMATE AND ARE SUBJECT TO MINOR DEVIATIONS AS MAY OCCUR OR BE NECESSARY IN CONSTRUCTION.
MINOR DETAILS NOT SHOWN.

1. PACCAR DEF TANK MOUNTED UNDER CAB ON THE DRIVER'S SIDE
2. BATTERY CHARGER LOCATED BEHIND THE DRIVER'S SEAT
3. BATTERY CHARGER INDICATOR LOCATED ON DRIVER'S SEAT RISER
4. FIVE ADJUSTABLE FULL WIDTH/FULL DEPTH SHELVES IN COMPARTMENT PER ORDER
5. ONE ADJUSTABLE TILTING SLIDE-OUT TRAY IN COMPARTMENT PER ORDER
6. THREE FLOOR MOUNTED SLIDE-OUT TRAYS IN COMPARTMENT PER ORDER
7. ONE SWING-OUT ALUMINUM TOOL BOARD IN COMPARTMENT PER ORDER
8. ONE SLIDE-OUT ALUMINUM TOOL BOARD IN COMPARTMENT PER ORDER
9. ONE VERTICAL PARTITION IN COMPARTMENT PER ORDER
10. TRIDENT FOLDING STEPS ON AERIAL DEVICE
11. L.E.D. LIGHTING ON AERIAL LADDER SECTIONS
12. 2-WAY INTERCOM SYSTEM BETWEEN AERIAL TIP OR PLATFORM AND TURNTABLE
13. AERIAL PEDESTAL RAISED 1.50"
14. LIFTING EYE RESCUE ATTACHMENT AT AERIAL TIP
15. 1500 GPM HIGH FLOW WATERWAY
16. THREE 120V DUPLEX RECEPTACLES LOCATED PER ORDER

REV	DATE	BY	CH
▽	-	-	-

CHASSIS DATA	
MAKE	PIERCE
MODEL	ENFORCER
TITLE	75 AERIAL LADDER & BODY ASSEMBLY -
FOR	SENECA FIRE DEPARTMENT SENECA, SC
DWG NO.	39188AD

JOB NO.	39188
SCALE	1:24
DATE	
DRAWN BY	JGA 060CT22
CHECKED BY	NAK 260CT22
SHEET SIZE	D
SHEET NO.	1 OF 1

View File Created 26-OCT-2022 12:29:57