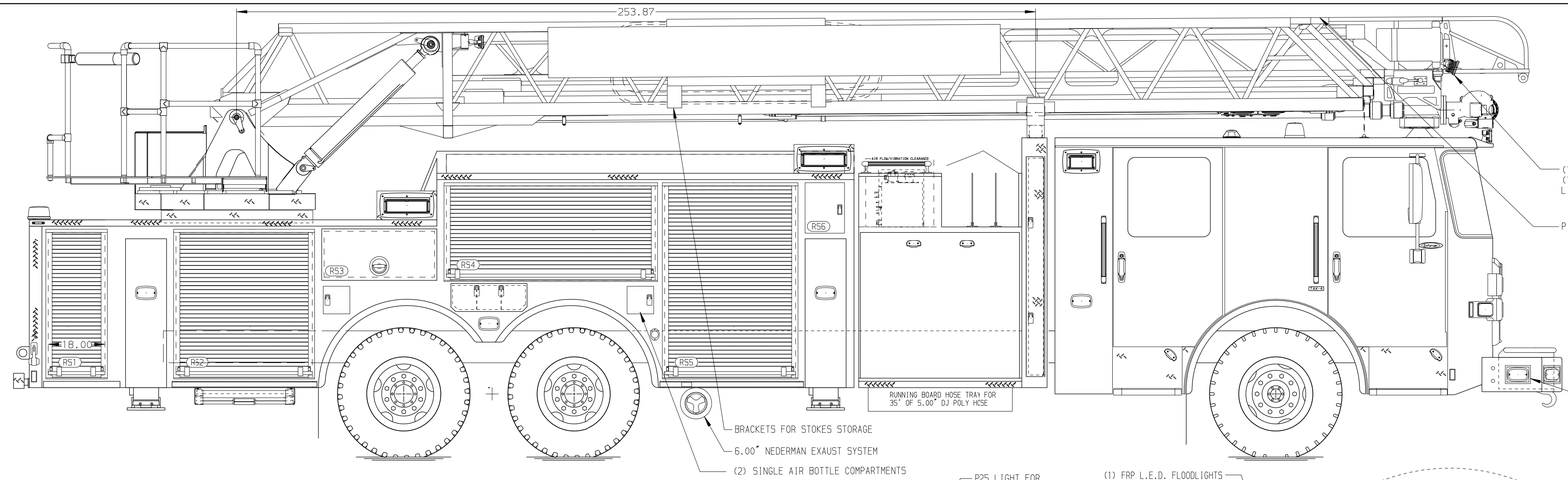

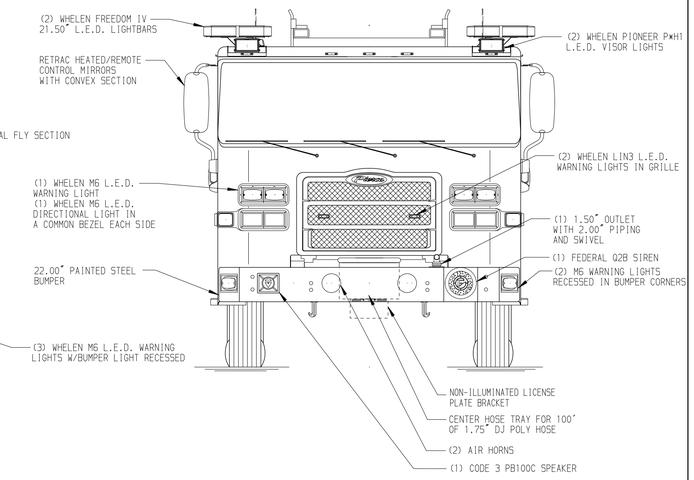

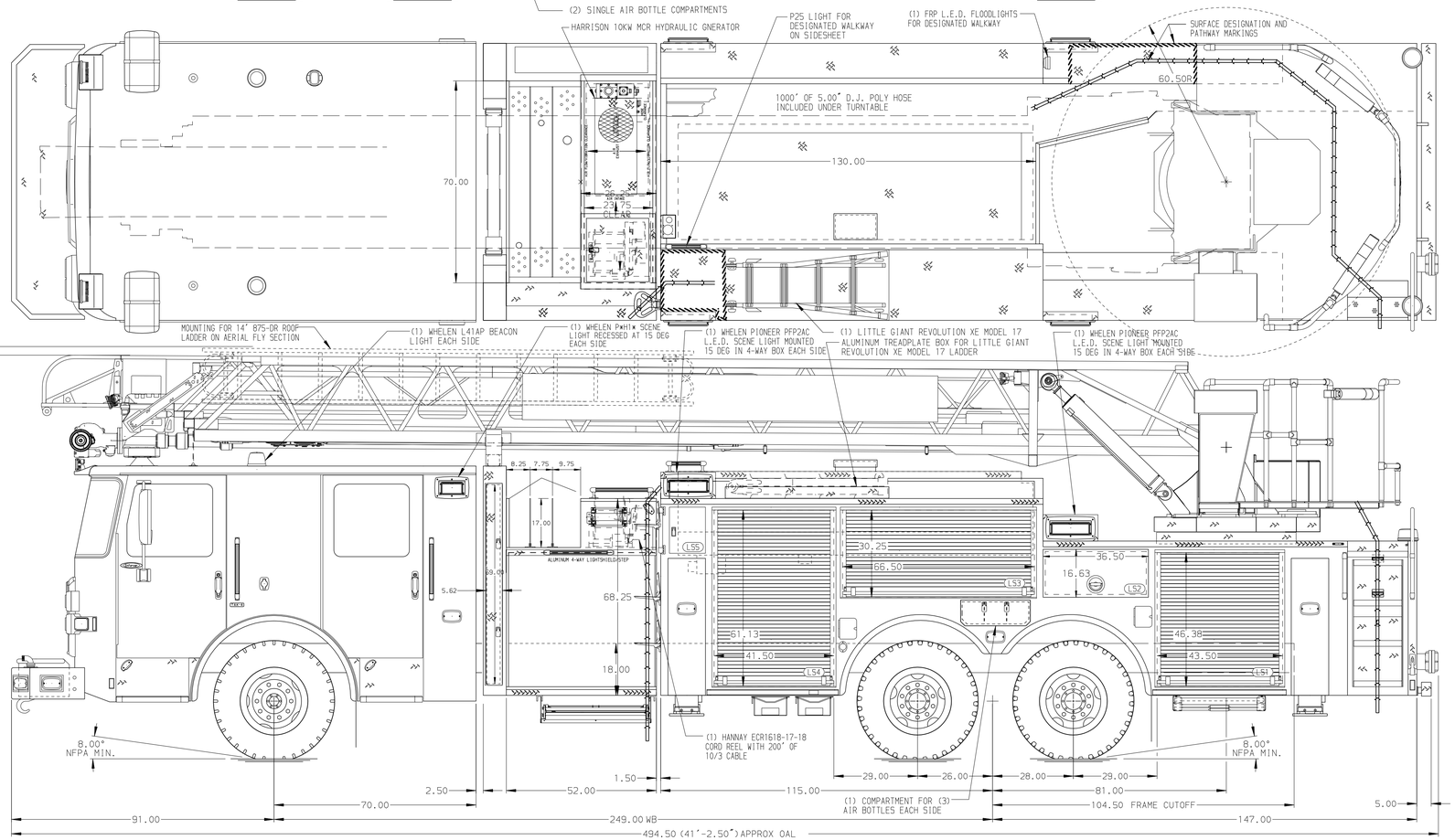

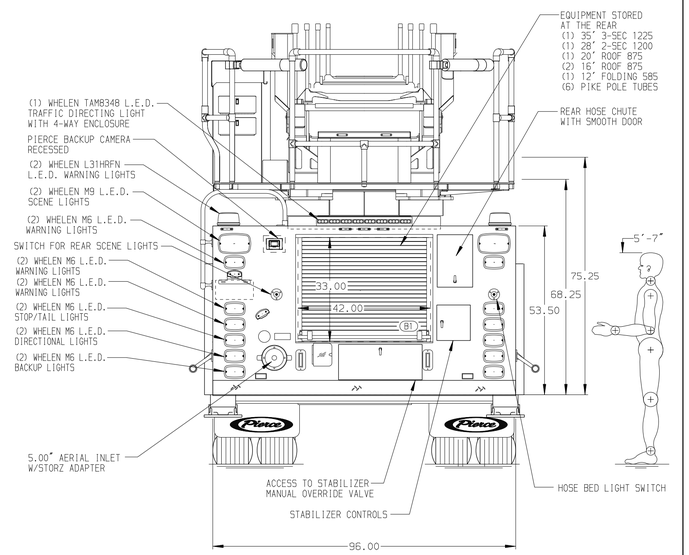

ALUMINUM BODY | MINIMUM A.O.A. = 12° | MINIMUM A.O.D. = 10.5°

CUSTOMER APPROVAL

APPROVED BY: _____

DATE: _____

Pierce MANUFACTURING INC.

NOTE

DIMENSIONS SHOWN ARE APPROXIMATE AND ARE SUBJECT TO MINOR DEVIATIONS AS MAY OCCUR OR BE NECESSARY IN CONSTRUCTION.
MINOR DETAILS NOT SHOWN.

1. 3.00" RAISED AERIAL PEDESTAL
2. LIMITED RETRACTION NOT REQUIRED ON AERIAL
3. BATTERY CHARGER LOCATED IN CAB BEHIND DRIVERS SEAT PER ORDER
4. BATTERY CHARGER INDICATOR LOCATED IN CAB BEHIND DRIVER SIDE DOOR
5. AC POWER TO AERIAL TIP
6. UNPAINTED SHELT TRACKS LOCATED IN COMPARTMENTS PER ORDER
7. FIVE ADJUSTABLE SHELVES LOCATED IN COMPARTMENTS PER ORDER
8. TWO SLIDE-OUT ADJUSTABLE TRAYS LOCATED IN COMPARTMENTS PER ORDER
9. ONE SCBA ZICO KD-UH-6-SF BRACKET LOCATED IN COMPARTMENT PER ORDER
10. CABLE DOOR STOPS LOCATED IN BOOM PANEL COMPARTMENTS PER ORDER
11. SHELF & TRAY MATTING LOCATED IN COMPARTMENTS PER ORDER
12. PAC TRAC LOCATED ON COMPARTMENT WALLS PER ORDER
13. ONE RECEPTACLE LOCATED IN EMS COMPARTMENT PER ORDER
14. ONE RECEPTACLE LOCATED IN BODY COMPARTMENT PER ORDER

REV	DATE	BY	CH
▽	-	-	-

CHASSIS DATA	
MAKE	PIERCE
MODEL	ENFORCER
TITLE	107' ASCENDANT AERIAL LADDER AND BODY ASSEMBLY 500 GALLON WATER TANK
FOR	U.S. NAVY INDIAN HEAD, MD
DWG NO.	39279AD

JOB NO.	39279
SCALE	1:24
DATE	
DRAWN BY	ANZ
07SEP22	
CHECKED BY	NDA
12SEP22	
SHEET SIZE	D
SHEET NO.	1 OF 1

View File Created 12-SEP-2022 09:21:04